TT electronics

Fixed Resistors

RESISTORS FOR AUTOMOTIVE APPLICATIONS -
Application Note

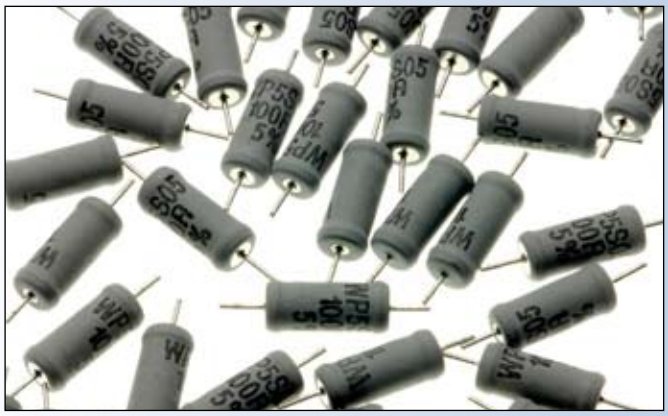

Automotive electrical and electronic design is rapidly advancing on many fronts as vehicle manufacturers strive to reduce cost and mass, while at the same time improving performance.

However advanced the digital design is though, many circuits depend on their analogue components for reliability and accuracy.

TT electronics has many years experience of working with designers to select and tailor optimised resistive product solutions for this wide-ranging application.

The TT electronics group as a whole supplies a wide range of electronic parts suitable for automotive applications.

There are many application areas in the automotive environment, from the benign to the extremely harsh.

These can be grouped as follows:

- Body areas.
- Entertainment systems.
- Cabin / comfort controls.
- Drive train applications, including starter / alternator systems and a 42V bus
- Engine management systems including sensors, and ignition / injection control.

This application note aims to guide the designer in selecting the optimum components by providing product data relevant to protection; voltage measurement and current shunt components. It should be read in conjunction with the full product data sheets.

- **High pulse energy resistors for use in power semiconductor circuits where high-level microsecond pulses are present.**
- **Cost-effective precision MELF resistors for calibration networks, trimmable resistors for precise setting of modules.**
- **Low value SM parts for current monitoring and control**
- **Special pulse or fuse tests and lead forming requirements can be accommodated.**

RESISTORS FOR AUTOMOTIVE APPLICATIONS - Application Note

Body Areas & Cabin Controls

The motors used for controlling windows, seats, mirrors and wipers require stall protection, which is provided by a range of low value TT electronics parts that may be free standing or integrated into control circuitry (LRF Series).

Also available are the LRZ range of links that can be used to enable optional circuits.

A low cost option for controlling cooling fan speed is the use of steel backed resistors from the WDBR series. Derivatives of this series have also been used as cooling water and alternator pre-heaters.

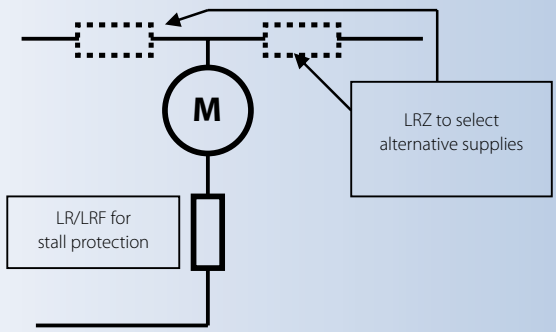

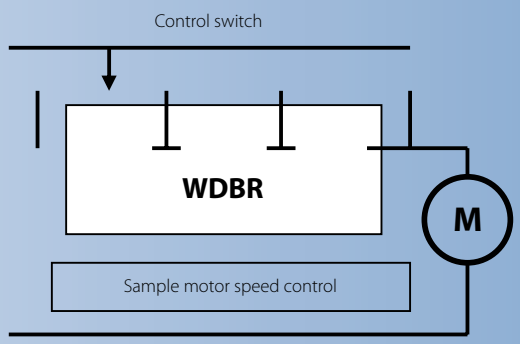

Integrated Drive Train & Starter/Alternators (including 42V systems)

This developing area generally uses modules (space is a premium / powers are high). OAR(S) and LRF (3W) chips are recommended for current measurement; with DSC chips being useful for gate driving and snubbering of semiconductor devices (IGBT, MOS) where narrow, high current pulses are encountered.

The more conventional alternator systems frequently require "Load Dump" resistors to prevent damaging high voltage transients when a load is suddenly removed or the engine is switched off from high speed. This resistor is usually connected in series with an avalanche diode; it sees a low average power but must withstand fast rising high power transients. A wirewound part such as SQP or WP-S series is needed here.

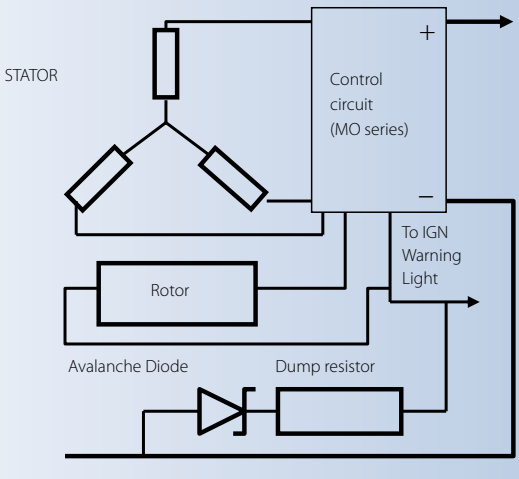

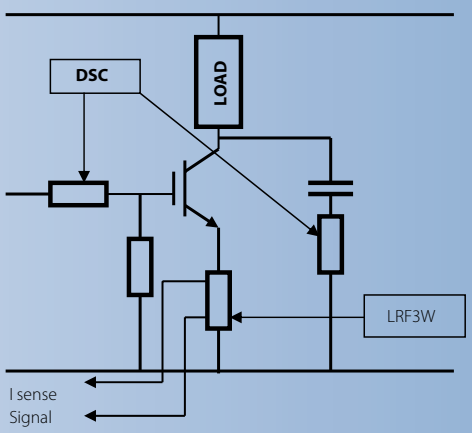

RESISTORS FOR AUTOMOTIVE APPLICATIONS - Application Note

DC/DC Converters

These devices are being introduced into hybrid and other vehicles where it is necessary to convert between different voltage busses. They are frequently modular components, which need to be set to specific voltages. CRT trimmable chips and PCR precision chips and dividers are useful here.

DSC chips with their compact high power capabilities are for use in drive circuits. LR series chips would be the choice for current measurement.

AC inverters, a related class of equipment are now often fitted to MPV's to give a "domestic" supply, powering "home" equipment. "Bootstrap" supplies are often used with these units whereby the control IC is fed from the input supply only at start-up, power then being supplied by the output circuitry. This requires the use of small, high pulse capability parts such as the DSC, SC3 and CHP series.

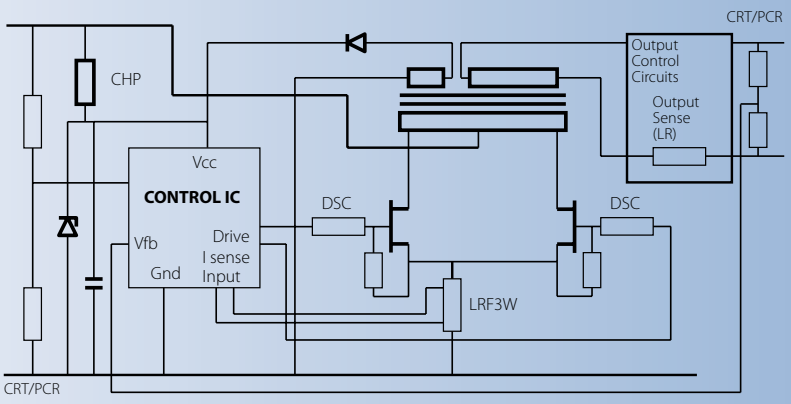

Lighting Supplies

Conventional incandescent lamps are either being phased out or require monitoring resistors for lamp failure circuits (LR series).

LED lamps are being used in many circuits other than headlamps. They can be simply driven in a series string with a dropper resistor (MFR3 in 3rd stop light), or by dedicated chips that require monitoring resistors.

HID headlamps use inverter drives to operate at high voltages and require components for voltage and current monitoring, which must be compact to fit within small modules, (HR, VRW series).

Motor controls are also fitted to headlamp systems for auto dip and "light round corner" applications, which need stall sensing and protection.

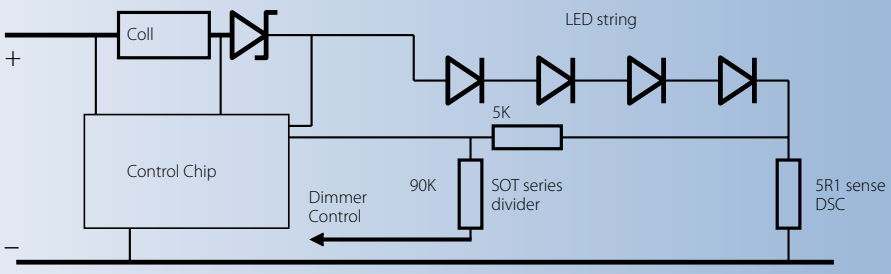

RESISTORS FOR AUTOMOTIVE APPLICATIONS - Application Note

Engine Management & Ignition/Injection Systems

These units consist of many subsystems that measure input parameters (throttle position, temperatures, airflows) and control actuators (motors, injectors, spark coils).

Precise dividers (PFC), high ohmic (HR) and current measurement shunts (LR) series are all required in the analogue input measuring and sensing circuits.

The output of the engine management system drives a variety of actuators that are usually controlled by power semiconductors (MOSFET's, IGBT's). These devices have high peak and low average gate drive currents; DSC chips, with their small size and high peak power are ideal in this position. They can also be suitable for device snubbers. The LR series is ideal for current measurement in the return circuit of power semiconductors, having been tested for its pulse withstand capabilities with narrow pulses (10us) and high powers >250W, simulating IGBT punch through characteristics.

For spark plug suppressor resistors we are supplying EMI 80 series derivatives; these are cartridge style cement coated, all welded, wirewound types, (Higher reliability than fibre cored, crimped types).

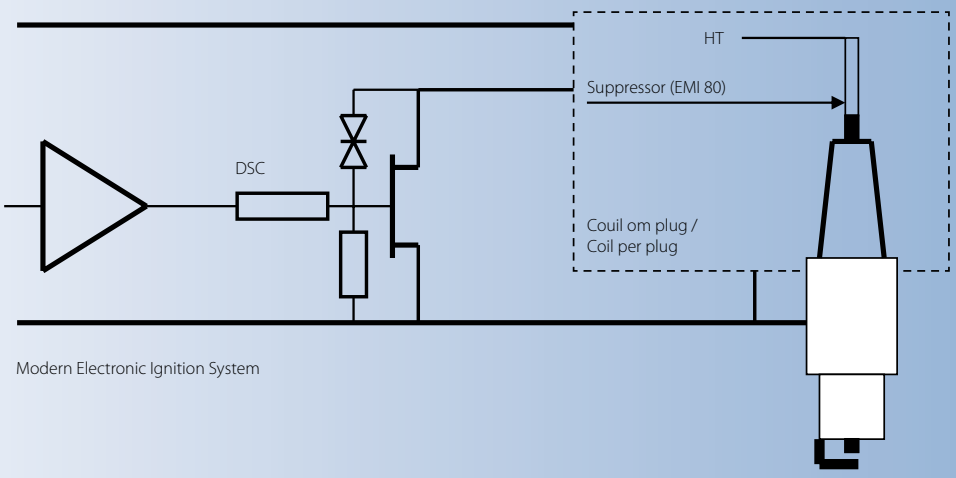

Modern Electronic Ignition System

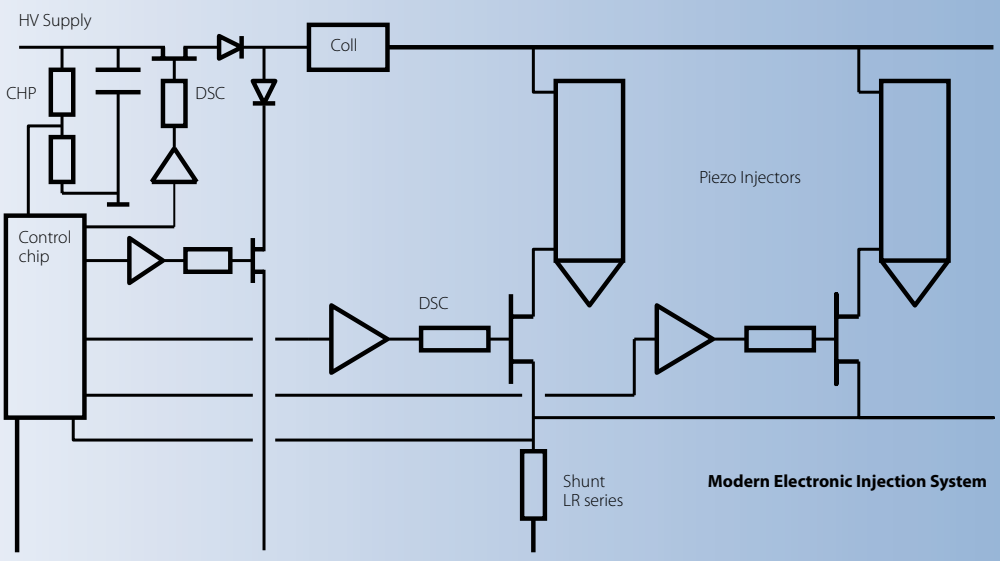

Modern Electronic Injection System

RESISTORS FOR AUTOMOTIVE APPLICATIONS - Application Note

Electrical Replacement of Mechanical Functions

Mechanical functions are increasingly being replaced with electrical drives as an aid to increased efficiency; due to their inherently fast response they only operate as required and are of lower mass than their mechanical counterparts. Typical functions are water and fuel pumps, cooling fans and power steer pumps.

These systems use small motor drives of multi-phase AC, or Brushless DC form. Their circuitry and component requirements are generally similar to the larger drives used with electric vehicles. (Below)

Hybrid/Electric Vehicles

There are many exciting and challenging developments taking place in this area where the drive to the wheels is usually electric. This gives a regenerative braking facility, allowing braking energy to be re-used for drive purposes. This energy can be returned to a battery, but batteries have poor conversion efficiencies at the high currents associated with re-gen braking. The preferred method is to store the charge in a high value "Supercap". This has better conversion efficiency than a battery but there is the danger that the capacitor can be charged to an excessive voltage, especially if re-gen braking is used on a long incline. In this instance a high power "dump" resistor is required to prevent excessive voltage rise of the drive bus. This application is best fulfilled with WDBR high power resistors.

The circuitry used for the control of the traction drive is usually a 3-phase bridge with freewheeling diodes (not shown). This allows full control of the motor in all 4 quadrants.

DSC chips are suitable for gate resistors in the various IGBT and MOSFET drives associated with these circuits. The LR series should be used for current measurement functions.

The WRM surface mount MELF series provides a compact high power resistor suitable for the higher voltages used in these circuits.

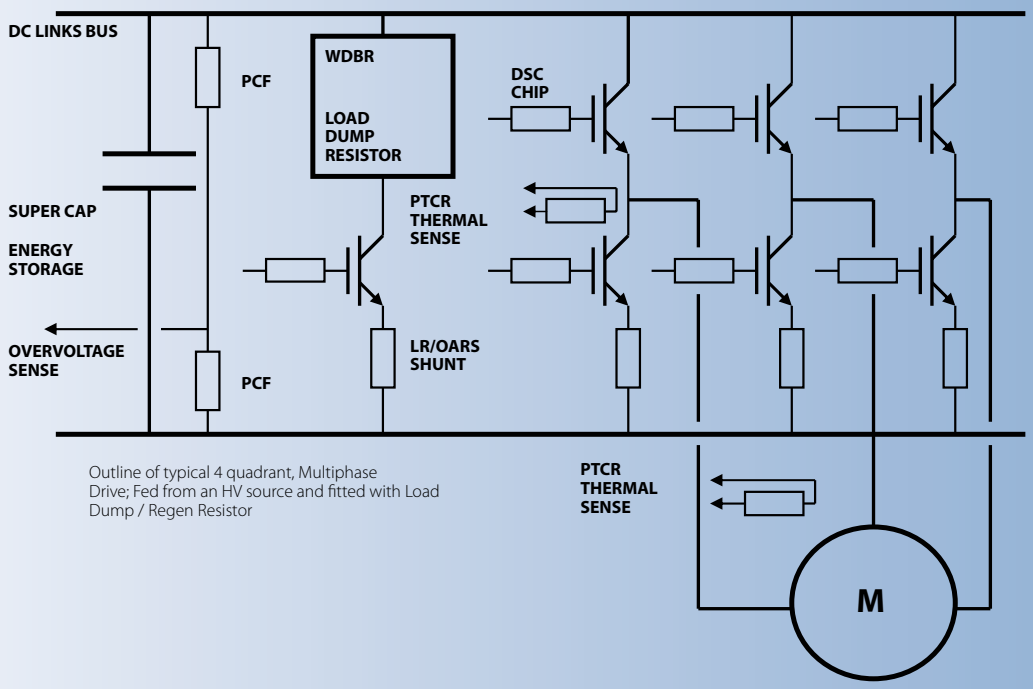

Outline of typical 4 quadrant, Multiphase Drive; Fed from an HV source and fitted with Load Dump / Regen Resistor

RESISTORS FOR AUTOMOTIVE APPLICATIONS - Application Note

Electrical Replacement of Mechanical Functions

SUITABLE RESISTOR FAMILIES	Axial parts	Heatsink mounted	SMD parts	LRZ Series	LR Series	OARS Series	DSC Series	SC3 Series	PCF Series	HR Series	CRT Series	PTCR Series	CHP Series	WRM Series (Mini-MELF)	WDBR Series	WP-S Series	W20 Series	SQP Series	MFR Series	MFP Series	VRW Series
BODY CONTROL SYSTEMS				*	*	*	*	*				*					*	*	*	*	
DRIVE TRAIN & STARTER/ ALTERNATORS					*	*	*	*					*		*	*	*	*	*		
DC/DC CONVERTERS					*	*	*	*	*		*			*		*			*	*	*
LIGHTING SUPPLIES				*	*	*	*	*	*	*			*			*	*	*	*	*	*
ENGINE MANAGEMENT & IGNITION				*	*	*	*	*	*	*	*	*	*	*		*		*	*	*	*
ELECTRICAL REPLACEMENT OF MECHANICAL FUNCTIONS					*	*	*	*	*		*	*		*	*	*	*	*	*	*	
HYBRID/ELECT VEHICLES					*	*		*		*		*			*		*	*	*		
MAIN PROPERTIES				Low resistance links, typically 1.5mR, to 35A	Low value, 3mR to 1R, up to 3W, low "L", suitable for current measurement, available with Kelvin connections	Sense resistors with flexible leads for high ΔT applications 3 to 50mR at 3W	High power paralleled elements for pulse performance 1R0 to 4M7 (depending on range) 1/3 to 1.5 W	Hi power, 3W part in 1W package 1R to 200R	Precision parts 1R to 2M, 1/16 to 1/4W	High value parts, 100M to 50G	Trimmable by up to 40%, 10R to 1M, 0.1 to 0.25W	Sense resistors, 100R to 800R, TCR's to + 3500ppm	Wide range MELF part, 0.1R to 2M2, 1/4 to 2W	Precision part to 0.1%, low TCR, 0R22 to 10M, 0.2 to 0.4W	Low profile power resistors 25 to 150R, peak power to 5KW	general purpose WW/cement parts, 0R01 to 10K, 1W to 7W	Vitreous parts for severe duty, 0R1 to 100K, 3 to 14W	Low cost ceramic box type 0R1 to 1M, 2 to 20W	Metal film types, high power for size, 1R to 1M, 0.4 to 0.75W	Flameproof metal film types 0R1 to 1M, 1&2W types	High voltage thick film to 3.5KV and 30M

Note: Circuit diagrams are shown for example only.

TT electronics: leading in fixed resistor technology.

www.ttelectronics.com www.bitechnologies.com www.irctt.com www.welwyn-tt.com

Europe: sales@ttelectronicseurope.com
Asia: sales@ttelectronicsasia.com
Americas: sales@ttelectronics-na.com

Bi technologies IRC Welwyn
TT electronics companies

General Note
TT electronics reserves the right to make changes in product specification without notice or liability.
All information is subject to TT electronics' own data and is considered accurate at time of going to print.

© TT electronics plc LIT-AN-AUTOMOTIVE Issue 2