Guide to Operation

I. Electrical Description

The NB Series of DC-DC converters utilize a unique “series” power transformer stage yielding significantly greater power densities than existing designs. Use of a passive “lossless” snubber circuit minimizes noise while increasing converter efficiency. Advanced current mode control is utilized enabling fast transient response time. Input to output isolation is accomplished via magnetic feedback. The switching frequency of the NB series is fixed at 200kHz (factory set; greater than 180kHz and less than 200kHz) to minimize noise and allow for simplified EMI filtering (a companion EMI module is available).

II. Mechanical Description

General

The NB series converters are encased in a 5 sided steel can with an aluminum baseplate to facilitate heat transfer. Their height dimension of 0.375” allows for mounting in standard 1/2 inch width circuit card racks. The NB series is available in three pin-out configurations; (1) pins out the side, for chassis mounting and maximum height reduction, (2) pins out the top, for PCB mounting with forced air cooling (baseplate exposed to forced air), and (3) pins out the bottom (through the baseplate) for mounting to a metal clad PCB. The pins are non-rigid and may be formed to suit specific mounting configurations. Care should be taken not to excessively bend or over stress the pins to avoid breakage.

The high efficiency of the NB reduces heat dissipation and minimizes heat sinking requirements i.e., typical dissipation of the 50 watt converter operation at full load will be between 14 and 16 watts. Though this reduces heat sinking requirements, ***the baseplate temperature must be maintained below +100ºC for military versions and +71ºC for industrial versions or permanent damage may occur.***

Installation and Mounting

Before mounting the converter be sure that the mounting surface and converter baseplate is clean. Heat sink mounting surfaces must be smooth, flat to within 0.005 and cover the entire baseplate of the module. Based on the calculated power dissipation (see Application Notes on Common Equations for sample calculation) the heatsink should have adequate heat dissipation characteristics. To facilitate heat transfer, apply thermal compound to the base of the module before mounting it to the heat sink. It is extremely important to achieve a good thermal interface between the base of the converter and the heatsink. We highly recommend the use of thermal grease or some other type of conducting material. Failure to achieve a good thermal interface may result in damage to the converter.

There are three types of mounting inserts available on the NB series; smooth through hole, 4-40 or M2.5 metric threaded inserts (to specify which, see "How to Order" section on specification sheet). For the threaded inserts mounting studs should not exceed a penetration of five threads. Each NB series converter has a label on it that will clearly identify pin functions and electrical ratings. Descriptions of these functions can be found in the Guide to Operation and the Application Notes sections. Before electrically wiring the converter we recommend carefully reviewing the application notes section entitled "General Application Notes" and "Wire Gage & Distance to Load".

III. Military Specifications

The NB series is environmentally sealed and are fully qualified to the following military environmental specifications;

Specification	*Condition*	*Method*	*Procedure*	*Test Condition*
MIL-STD-704D	Input Transient			Transients up to 50 V for 0.1 second
MIL-STD-810E	Vibration	514.4	1	Up to 30gs, each axis for 1 hour
MIL-STD-810E	Humidity	507.3	1	95% humidity, non-condensing for 10 days
MIL-STD-810E	Temp/Altitude	520.1	3	40 hours from -55°C to +71°C
MIL-STD-810E	Acceleration	513.4	3	14gs each axis
MIL-STD-810E	Temperature Shock	503.3		-55°C to +100°C (non-operating, one hour each cycle)
MIL-S-901C	High Impact Shock			5 foot hammer drop

Certified test reports are available upon request.

1111 Knox Street ■ Torrance ■ CA 90502 ■ USA ■ Tel: +1 310 202 8820 ■ sales@martekpower.com

The NB series have been tested and found to meet the requirements of Mil-Std-461D for conducted emissions/interference on the input power leads (CE101 and CE102) when used with the appropriate NBF passive EMI filter. In addition, the series have been fully characterized to Mil-Std-461D for radiated interference (RE101, RE102), conducted susceptibility (CS101, CS114, CS115 and CS116) and radiated susceptibility (RS101, RE103). Full test reports are available upon request that detail our level of compliance for each of these conditions.

IV. Product Features

Output Voltage Sensing (NB50), 100, 150 and main output NB80)
Output voltage sensing is provided for either local (at the unit) or remote (at the load) sensing. The sense feature can automatically compensate for up to a 0.5V drop in the leads to the load. **The sense pins must be connected (either local or remote) for operation**. If remote sensing is not desired it is required to tie the sense pins locally, i.e., -sense to -output and +sense to +output. See application notes for more details.

Power Good/Built-in-test (NB50,100, 150, and main output of NB80)
A power good signal (pin) is provided to allow for the monitoring of the output voltage. The power good is set at +5V (referenced to the input return). If the output voltage of the converter drops below 90% of its normal set going (i.e., out of regulation), the power good pin is actively pulled low through a voltage comparator. See application notes for more details.

TTL (Remote on/off) (All Models)
The TTL feature is used to command the NB series on and off and is referenced to the input return. When the TTL pin is left unconnected or, if a voltage between 2.4V and 5.0V is applied to the pin, the converter will remain on. When the TTL pin is pulled down below 0.8V the unit will turn off. See application notes for more details.

Parallel Operation (NB50, 100 and 150 Single Outputs)
A parallel circuit is provided to allow for parallel operation to achieve higher output power or N+1 redundancy. Parallel operation is accomplished by connecting all the parallel pins together (single pin wiring), all synchronization pins together and connecting all input power leads (+ and - leads) together. Units will parallel between ±10% of total output power current.

Over Temperature Protection (All Models)
An integral electronic over temperature shut down circuit is provided to protect the NB series from accidental over heating. If the temperature (measured at the baseplate) of the converter exceeds 5% above the rated high operating temperature, the unit will automatically shut down. Once the temperature (measured at the baseplate) is reduced to 85%, of the rated high operating temperature, power will be automatically restored.

Output Voltage Trim (All Models)
An output voltage trim pin is provided for the adjustment of the output voltage. Using this feature the output voltage can be trimmed up to 110% (trim is only available to increase the output voltage) of nominal. To increase the output voltage of the NB series, simply attach a resistor between the trim pin and the input return of the unit. See application notes for more details.

Switching Frequency Synchronization (NB50, 100, 150)
The NB series switching frequency is factory set greater than 180kHz but less than 200kHz. The synchronization clock will be at twice the switching frequency. If desired, several NB units may be synchronized to the same switching frequency by wiring all of the sync pins together and wiring all input returns of the units together. The unit which is switching at the fastest rate will automatically become the “master” and will adjust the remaining units to switch at the same (higher) frequency. Also, the frequency of the synchronized units may be increased by injecting a higher frequency pulsed waveform into the sync pin. See application notes for more details.

Overload/Short Circuit Protection (All Models)
The output of the NB Series is protected from an accidental overload or short circuit condition of any duration. When the output load exceeds the full load capability of the supply (between 105% to 150% of the maximum rated

1111 Knox Street ■ Torrance ■ CA 90502 ■ USA ■ Tel: +1 310 202 8820 ■ sales@martekpower.com

output current) the converter switches into a “Burp-Mode” (this is where the converter is sensing the overload and is continuously turning on and off in a controlled fashion). When the overload/short circuit is removed the converter automatically returns to its normal mode of operation.

Over Voltage Protection (All Models)
The NB series provides an internal “Latching” overvoltage protection circuit. Should an overvoltage condition occur the converter will shut off (output voltage will fall in accordance with Figure X). **Input must be recycled to restore output.**

V. Reliability

Reliability Calculation

In order to acheive superior reliability, the NB series converters adhere to the stringent component derating guidlines of NAVMAT P4855-1.The Mean Time Between Failure (MTBF) per MIL-HBDK-217F Notice 2 for the NB Series under the operating conditions of 50ºC baseplate, maximum rated output power for a ground benign environment is calculated in the following table. Test reports for all models are available upon request.

MODEL	MTBF HOURS	MODEL	MTBF HOURS
NB15SM (Military)	1,620,000	NB150SM (Military)	520,000
NB15SI (Industrial)	528,000	NB150SI (Industrial)	179,000
NB50SM (Military)	1,560,000	NBF150	10,495,500
NB50SI (Industrial)	538,200		

Standard Military Grade Module Screening

Each military grade NB module under goes environmental screening based upon the parameters outlined in Mil-Std-883 and NAVMAT P4855-1. The screening and process steps consist of the following;

1- Stabilization Bake; +125°C for 24 hours per Mil-Std-883, M1008.2 Condition B
2- Voltage Isolation and Parametric Testing at 25°C
3- Module encapsulation and sealing
4- Temperature Cycling (non-operational); 10 cycles minimum, at -55°C to +125°C, 36 minute transition with a 1 hour dwell at each temperature extreme. Procedure reference Mil-Std-883, M1010, condition B and NAVMAT P4855-1.
5- Voltage Isolation and Parametric Testing at 25°C
6- Long Term Operational Burn In; 160 hours of powered operation under load. Modules are continuously cycled from +85°C to thermal shut down point (+105°C) during the 160 hours.
7- Voltage Isolation and Parametric Testing at 25°C
8- Visual Inspection

Additional testing is available including parametric testing at temperature or extended burn in time. Consult factory for more information. Additional testing or customer specific testing will require additional charges.

Accelerated Life Testing

An accelerated life test was performed on representative sample units of the NB series to determine the long-term effects on performance. Units were subjected to 500 thermal cycles (non-operational) of -55°C to +125°C. At every 50th cycle modules were given full parametric testing. At the conclusion of the 500th cycle modules were found to operate within published specifications.

1111 Knox Street ■ Torrance ■ CA 90502 ■ USA ■ Tel: +1 310 202 8820 ■ sales@martekpower.com

Application Notes

General Application Notes....27
Wire Gage & Distance to Load....27
Ripple & Noise....28
Remote Sense....29
Remote On/Off....30
Output Trim....30
Series Operation....31
Parallel Operation....31
Synchronization....31
Power Good Signal....32
Electro Magnetic Filter (EMI) NBF50/150....32
Applications Manual....33
Block Diagrams....34
Frequently Asked Questions....36
Trim Values....37

1111 Knox Street ■ Torrance ■ CA 90502 ■ USA ■ Tel: +1 310 202 8820 ■ sales@martekpower.com

General Application Notes

The NB Series of DC-DC converters utilize a unique “series” power transformer stage yielding significantly greater power densities than existing designs. Use of a passive “lossless” snubber circuit minimizes noise while increasing converter efficiency. Advanced current mode control is utilized enabling fast transient response time. Input to output isolation is accomplished via magnetic feedback. The switching frequency of the NB series is fixed at 200kHz (factory set; greater than 180kHz but less than 200kHz) to minimize noise and allow for simplified EMI filtering (a companion EMI module is available). Sufficient capacitance on the input and output, internal to the unit, allows for simple use and operation with no external components in most applications.

The NB units are supplied in a five sided metal case to minimize radiated noise. The height dimension of 0.375" allows for mounting in standard 1/2 inch width circuit card racks. The NB is available in three pin-out configurations; 1) pins out the side for chassis mounting and maximum height reduction, 2) pins out the top for PCB mounting with forced air cooling (baseplate exposed to forced air), and 3) pins out the bottom (through the baseplate) for conduction cooling via a metal clad board. The high efficiency of the NB reduces head dissipation and minimizes heat sinking requirements i.e., maximum dissipation of the 50 watt converter will be between 10 and 16 watts. A number of protection features, as well as electrical and thermal derating of internal components allows for high reliability throughout the entire operating ranges. There are two operating ranges available, -40 °C to +71°C (for industrial applications) and -55 °C to +100 °C (for military applications). All -55 °C to +100 °C units ("M" level) are fully screened in accordance with Mil-Std-833. Qualification test reports to Mil-Std-810E and Mil-Std-901C are available on request.

The most basic use of the power converter is shown in figure 1. An input fuse is always recommended to protect both the source and the power supply in the event of failures. Bus fuse type MDX or equivalent slow-blow is recommended with a current rating approximately 200% of the full load input current to the converter. Having a slow-blow type fuse will allow for the converter's inrush charge at turn-on.

The sense pins of the converter must be connected to their corresponding output bus. Inherently, power converters will have some internal energy loss, which is dissipated in the form of heat through an aluminum mounting surface. This surface must be cooled to maintain a temperature below the maximum operating temperature.

Basic Converter Hook-up

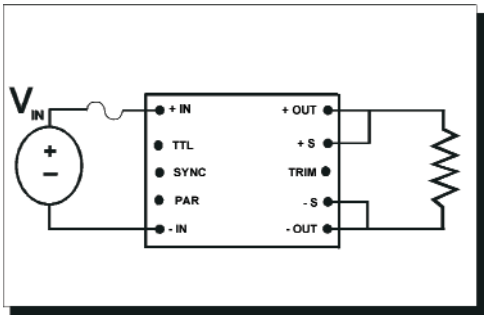

Figure 1

Wire Gage & Distance to Load

If the resistance of the wire, printed circuit board runs or connectors used to connect a converter to system components is too high, excessive voltage drop will result between the converter and system components, degrading overall system performance.

For example, if the DC/DC converter in Figure 1a is a 50W unit (5 VDC @ 10 Amps) with output load regulation specified at 0.2%; the connection as shown will degrade load regulation by a factor of 10. In this example, the 4 feet of #14 AWG wire used to connect the converter output to the load, has a total line resistance of 10 mW (ignoring any contact resistance). For a 50W, 5VDC output converter, the drop across the lead resistance will be 100 mV (10 A X 0.010W) or 2% of the output. Thus, the converter was selected for 0.2% regulation, but the power system layout achieves only 2.2%.

Basic Hook-up

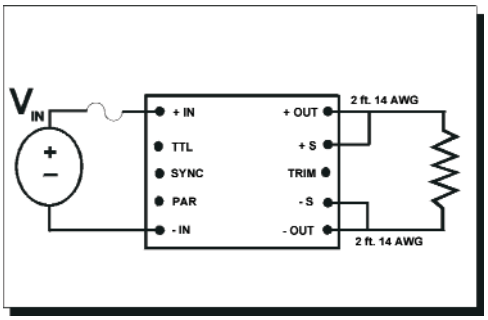

Figure 1a

1111 Knox Street ■ Torrance ■ CA 90502 ■ USA ■ Tel: +1 310 202 8820 ■ sales@martekpower.com

This can be corrected by decreasing the distance between the converter output and load. If that is not possible, using larger diameter wire (see Table 1), or PCB runs that have a larger cross sectional area and shorter length will also reduce conductor resistance. The use of the converter's remote sense capability will also work (see remote sense for more information on this option).

#AWG	Current Resistance mΩ/Foot	#AWG	Current Resistance mΩ/Foot
9	0.792	21	12.77
10	0.998	22	16.20
11	1.261	23	20.30
12	1.558	24	25.67
13	2.001	25	32.37
14	2.524	26	41.02
15	3.181	27	51.44
16	4.020	28	65.31
17	5.054	29	81.21
18	6.386	30	103.7
19	8.046	31	130.9
20	10.13	32	162.0

Table 1

Note: High IR drops between the converter and load may cause converter parameters such as output voltage accuracy, trim range, etc. to appear to be out of specification-fication. High IR drops on input lines may cause start up problems (voltage at the input pins below the input range of the converter).

Obviously, any connections made to the power distribution bus may present a problem. Poor connections (such as microcracking around solder joints) can cause serious problems such as arcing. Contact resistance must be minimized. Proper workmanship standards must be followed to insure reliable solder joints for board mount converters.

Terminal strips, spade lugs and edge connectors must be free of any corrosion, dust or dirt. If parallel lines or connections are available for routing converter output currents, they should be utilized.

Ripple & Noise

Output ripple and noise (sometimes referred to as PARD or "Periodic and Random Deviations") can be defined as unwanted variations in the output voltage of a power supply. In switching power supplies this output noise is seen as a series of pulses with a high frequency content and is therefore measured as a peak value (i.e., specified as "peak-to-peak").

Our power supplies are specified and tested in the factory with a 25 MHz or 10 Mhz bandwidth oscilloscope. Measurements taken by a scope set at higher frequencies (i.e. 300 MHz) may produce significantly different results due to noise coupling on to the probe from sources other than the power supply.

Noise that is common to all output leads of a power converter with respect to the chasis is referred to as common mode noise. Noise that is apparent on one output lead with respect to corresponding output lead is referred to differential mode noise. Common mode noise is produced in switching action. Abbott typically minimizes the level of output common mode noise by incorporating line to chassis ground capacitors (on input and output leads) into the power converters. In most cases this is sufficient to minimize the level of common mode noise, however if further attenuation is required additional line to chassis ground capacitance may be added by the customer at the system level. Abbott noise specifications (output ripple specifications) all reference the level of differential mode noise at a given bandwidth, not the level of common mode noise. The measurement of differential mode noise is detailed in the following paragraphs.

Measurement Techniques

The length of all measurements leads (especially the ground lead) should be minimized and the sense pins should be tied to their respective outputs (+Sense to +V out). We recommend measurement as close to the supply as possible. This can be accomplished by connecting a short bus wire (generally 0.5 inches or less, making a loop at the end to place in the probe) to the negative and positive outputs on the back side of the connector mate, then place the tip of the probe on the +output and ground ring (or ground band) on the -output for a true ripple measurement. This is displayed in Figure 1b;

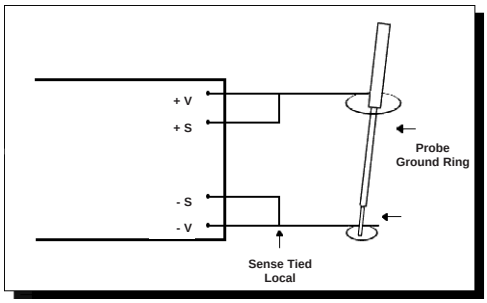

Figure 1b

Utilizing the probe ground ring (as opposed to a ground wire) will minimize the chance of noise coupling from sources other than the power supply. If this is not practical or possible then attach a 6 to 8 inch twisted pair wire to the outputs of the power supply and place a

1111 Knox Street ■ Torrance ■ CA 90502 ■ USA ■ Tel: +1 310 202 8820 ■ sales@martekpower.com

10-20 uF tantalum capacitor (low ESR type, with an appropriate voltage rating) across the load. This test method is shown on Figure 1c.

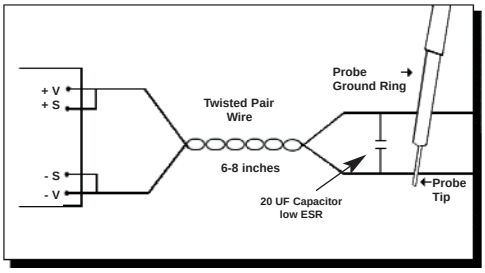

Figure 1c

This test method will enable a remote measurement and eliminate any noise that may couple on to the extended leads coming off the converter.

Ripple Reduction Techniques

In applications where the output ripple of the converter is higher then desired various techniques can be employed to reduce output ripple and noise (PARD). One method is to add additional capacitance in parallel with the output leads of the converter (low ESR type tantalums or ceramics are recommended). This should substantially reduce PARD, but be aware that excessive additional output capacitance can cause converter oscillations (see Table 2 for the maximum allowable capacitance that may be added to the output leads and for typical output ripple values with this capacitance added).

Output Voltage	Maximum Capacitance per 50W channel	Typical Vp-p@10MHZ (full load, nominal input voltage)
2V	300uF	20mV
3.3V	300uF	25mV
5V	300uF	20mV
5.2V	300uF	20mV
12V	132uF	25mV
15V	90uF	25mV
24V	60uF	20mV
28V	28uF	40mV

Table 2

Another way to reduce PARD is to use Abbott's output ripple attenuator module, SMRA (see Table 3 for typical output ripple values while using the SMRA with an NB series 50 watt channel. Full specifications for the SMRA module can be found in the SM series data book).

Output Voltage	Typical Vp-p@10MHZ (full load, nominal input voltage)
2V	10mV
3.3V	10mV
5V	10mV
5.2V	10mV
12V	10mV
15V	10mV
24V	15mV
28V	SMRA not recommended with 28V channel

Table 3

Remote Sense

Remote sense pins, +S and -S have been provided on selected NB Series converters for applications where precise load regulation is required at a distance from where the converter is physically located. (Not all converters have this feature. Check specific data sheets for details.) If remote sensing is NOT required, these pins **MUST be tied** to their respective output pins (+S to +OUT and -S to -OUT). If one or more of these sense pins are not connected to their respective output pins, the output(s) of the unit will not regulate to within specification and may cause a high output voltage condition.

Remote Sense - Single Output

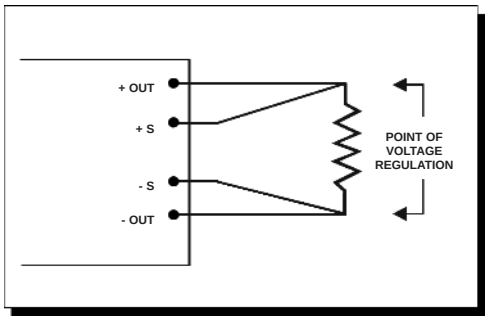

Figure 2

- **DO NOT** connect sense pins to any pin other than their respective output pins or permanent damage will occur.
- **DO NOT** connect sense pins to any load other than the same load the output pins are connected to or permanent damage may occur.

The internal remote sense circuit is designed to compensate for a maximum of 0.5V difference (0.25V in each output lead) in voltage between the load and the power converter. Longer output leads or traces are required to be of sufficient gauge or width to maintain the voltage drop across them of 0.5V maximum at rated load current.

Remote On/Off

Remote turn ON/ turn OFF feature (TTL) is an additional feature of the NB Series. This feature is especially useful in portable/mobile applications where battery power conservation is critical or in applications involving high power pulsed loads where inrush currents are high.

1111 Knox Street ■ Torrance ■ CA 90502 ■ USA ■ Tel: +1 310 202 8820 ■ sales@martekpower.com

The NB Series employs a typical TTL open collector with positive logic control pin. The voltage level at the TTL pin is referenced with respect to the converter -VIN input. When the TTL circuit is pulled to less than 0.8 V ("logic 0") with respect to the - VIN pin, via either an open collector (see Figure 3), or totem-pole driver, or a mechanical switch, with a 100µA capability, the converter shuts down. An optocoupler can also be used if the TTL signal needs to be referenced from the output side. If the TTL pin is left floating or is pulled above 2.4V up to 5.0V ('logic 1') the unit will remain on. Many more devices can be used to activate the TTL pin shut-down function, consult the factory for your specific requirements. When employing multiple NB modules which are to be turned on and off at the same time, tie the TTL pins of every module together.

Remote Turn On/Off

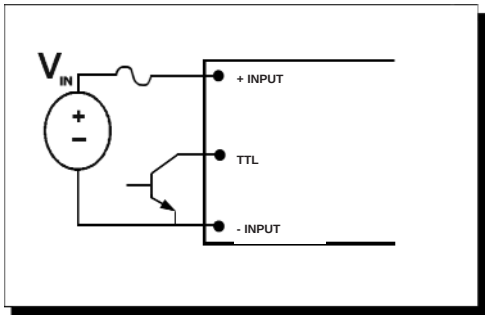

Figure 3

Output Trim

The output voltage is increased by simply connecting a resistor between the trim pin and the input voltage pin (see Figure 4).

Basic Trim

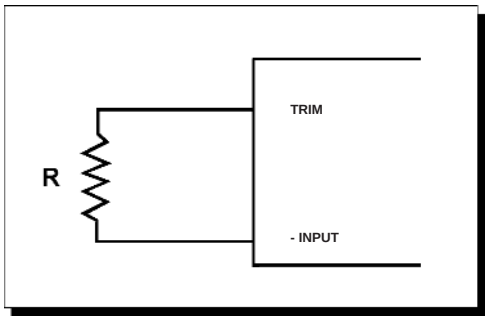

Figure 4

The value of the resistor required is determined by using the equation below.

$$R^* = \frac{R_3(R_2+39K-R_2V_{OUT})+39KR_2}{R_2(V_{OUT}-1)-39K}$$

$$R_{(NB100S)} = \frac{R^*}{2} \qquad R_{(NB150S)} = \frac{R^*}{3}$$

$$R_{(NB15S)} = \frac{49KR_2-10KR_2V_{OUT}+390M}{R_2(V_{OUT}-1)-39K}$$

The values of R2 and R3 are output voltage dependent per the following table:

V_{OUT}	R_2	R_3
2V	41.98K	20K
3.3V	16.96K	20K
5V	9.75K	20K
12V	3.55K	20K
15V	2.79K	8.25K
24V	1.70K	8.25K
28V	1.44K	8.25K

The equation for R is valid for the NB50S, 50T (main output), 100D and 150T. For the NB100S and 150S, use the R(NB100S) and R(NB150S) equations accordingly. For the NB15S, 30D and 45T, use the R(NB15S) equation. For NB80T use R for main output (50 watt channel) and R(NB15S) for auxiliary channels.

Resistor values for trim ranges have been calculated for your reference on page 37.

Example 1:

We have a NB50S with a 24 volt output but need trimming up to 25.5 Vdc. The equation would be as follows,

$$R = \frac{8.25K(1.70K + 39K - 1.70K(25.5)) + 39K(1.70K)}{1.70K(25.5 - 1) - 39K}$$

R = 16.77KΩ

By using a 16.77KΩ resistor for the trim resistor R, the output voltage will be 25.5 Vdc.

Figure 4a shows a scheme for a continuously variable output from 100% to 110% of nominal output voltage (voltages higher than 110% may activate the overvoltage protection circuit).

1111 Knox Street ■ Torrance ■ CA 90502 ■ USA ■ Tel: +1 310 202 8820 ■ sales@martekpower.com

Variable Trimming

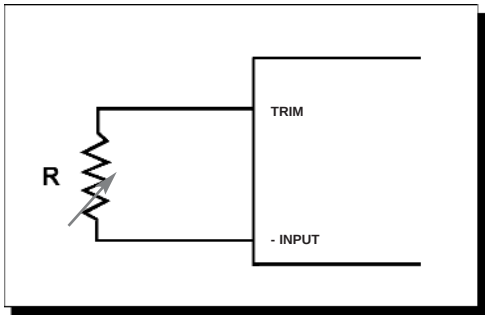

Figure 4a

Series Operation

The NB family of power converters may be arranged in a series operating mode to supply higher output volt- ages when required (see Figure 5). In this configuration D1 and D2 are added to protect against the application of a negative voltage across the outputs of the power converters during power up and power down. The two (or more) units need not have the same output voltage, but the output current supplied in this configuration will be limited to the lowest maximum output current of the modules used.

Series Operation

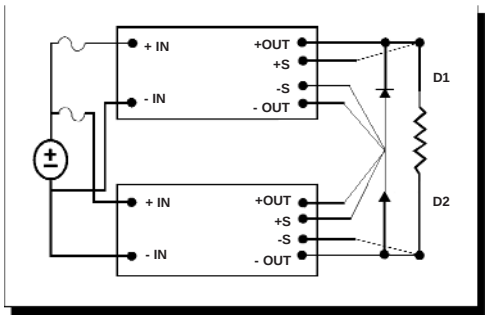

Figure 5

Parallel Operation

The NB Series converter has the capability of being paralleled to drive loads of higher power. (**Not all converters have this feature. Check specific data sheet for details**). The PAR pin is sup- plied on the unit for this function. If parallel operation of two or more units is required, the following precautions must be followed. (NOTE: It is not recommended to parallel more than five 50 watt units or two 100 watt units. The 150 watt units may be paralleled to a maximum power level of 250 watts.)

- Corresponding input and output leads or traces on each unit should be as equal in length and size as practical. The more equivalent the leads are the closer the current sharing.
- The leads connecting the PAR, SYNC and -IN pins may need to be shielded to avoid high frequency noise interference in very high power applications.
- The PAR, SYNC and -IN pins of all units should be tied together.

OR-ing diodes may be included in the positive output leads for true N+1 redundant systems, but are not necessary. Local sensing should be used whenever possible to minimize noise on +S and -S pins in parallel applications. In some applications, especially in those where it is difficult to keep output and input leads of equal size and length, a series resistance may be inserted in the +S lead. This will give the converter the ability to compensate for lead imbalance. Note: this will also result in a slightly higher output voltage.

Parallel Operation

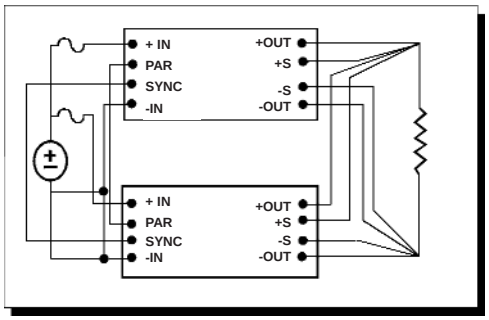

Figure 6

Synchronization

Synchronization of multiple units to each other or to a central clock frequency is essential in noise sensitive systems. Selected NB Series units are capable of being synchronized to each other by tying the SYNC and -IN pins together. (**Not all converters have this feature. Check specific data sheet for details.**) This will synchronize all of the units together (see Figure 7).

Synchronization of NB Units

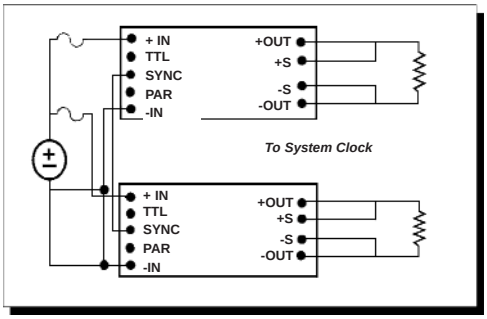

Figure 7

1111 Knox Street ■ Torrance ■ CA 90502 ■ USA ■ Tel: +1 310 202 8820 ■ sales@martekpower.com

The NB Series converter can be tied to the central clock (see figure 7a) by inputting a square wave clock signal (standard TTL levels of '0V' and '5V' are recommended) which has a frequency of 400 kHz or greater (a period of 2.5 µS or lower) and a duty cycle of no less than 10% (a pulse width of greater than 0.25µS). The NB Series converter's internal synchronization circuit is triggered by the rising edge of this clock waveform. **The frequency can be increased by the external clock between the frequency range of 400-420 KHz.** The input resistance of the SYNC pin for each NB50S is 110 ohm. Higher frequencies make the unit less noise tolerant and care should be taken in how the SYNC pin line is connected between units and/or system clock. In some cases shielding the SYNC pin line will help eliminate the noise. Do not add any capacitance from the SYNC pin line to ground.

Synchronization to External Clock

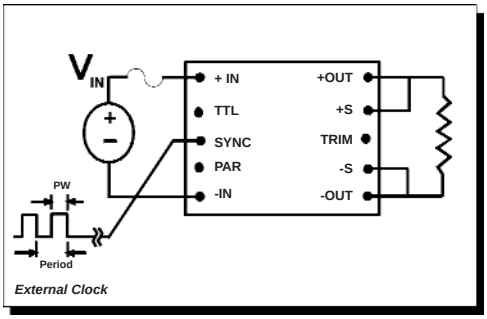

Figure 7a

Power Good Signal

The power good signal is provided on selected units to allow for the monitoring of the output voltage. (**Not all converters have this feature. <u>Check specific data sheet for details).</u>** The power good is set to +5V (referenced to the input return) whenever the output of the unit is above 90% of its nominal value.

Power Good

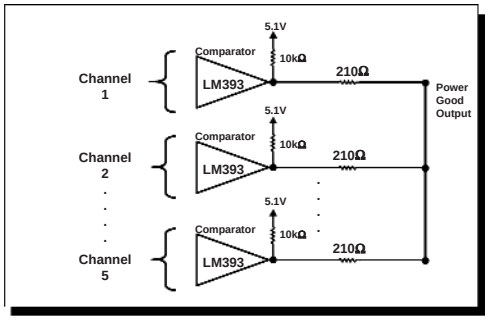

Figure 8

If the output voltage falls below this point the power good pin is actively pulled low. Also, if the output overvoltage circuit triggers due to an overvoltage condition the power good pin is actively pulled low.

See Figure 8 for a schematic of the power good circuity internal to the unit. This figure shows a comparator with a series resistance of 210Ω to the external power good pin. When multiple channels are utilized the power good circuitry is connected as shown (i.e., the NB150T has three channels and therefore has three power good circuits connected together internal to the unit).

Electro Magnetic Filter (EMI) NBF50 & NBF150

For applications where electromagneticinterference is a concern, the NBF (50 and 150 watt capable), a passive input line filter, may be installed at the input of the NB series converter (see figure 9). With the NBF Mil-Std-461D, CE101-4 and CE102 are within compliance on the input leads. Test reports characterizing both filters for conducted and radiated emission and susceptibility are available. Filters guarantee conducted emissions (on the input leads) only. All test reports are certified by an independent testing lab.

NBF Connection

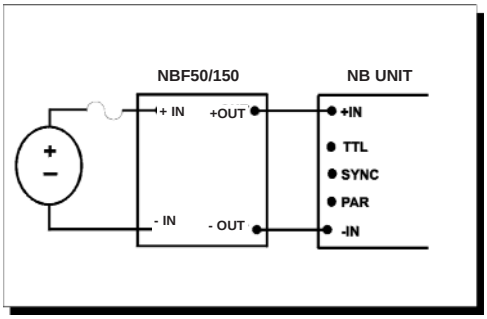

Figure 9

1111 Knox Street ■ Torrance ■ CA 90502 ■ USA ■ Tel: +1 310 202 8820 ■ sales@martekpower.com

Calculation of Input Current

Calculating the required current draw for your converter is as follows.

$$\text{Maximum Input current} = \frac{\left[\dfrac{\text{Output Power}}{\text{Efficiency}}\right]}{\text{Minimum Steady State Input Line}}$$

The above calculation will yield the converter's input current. For Example;
Model: NB50SM/5-C
Output Power: 50 watts
Steady State Low Line: 22 VDC
Efficiency; 72% at 22 VDC line, full load (see tables in Performance Characteristics) assuming 5% safety factor efficiency is then 67%
Minimum Steady State Input Line: 22 VDC

$$\text{Input Current} = \frac{\left[\dfrac{50\text{ watts}}{0.67}\right]}{22\text{ VDC}} \qquad \text{Input Current} = 3.39\text{ amps}$$

The worst case steady state input current to the NB series converter operating at full load with an input of 22 VDC is 3.4 amps.

Note: it is always best to be conservative. The figures for input voltage and efficiency should always include some additional margin for error.

Power Dissipation

The calculation of the total power dissipated from the converter will be essential for thermal management of the device. Unlike other types of electronic devices DC/DC converters tend to generate a significant amount of heat. This heat is channeled (by design) to the bottom or baseplate of the module. The following equations assist when designing a suitable heat sink.

The basic equation is;

$$P_{Diss} = P_{in} - P_{out}$$

Where P_{out} is defined as the maximum load condition and P_{in} is defined as a function of P_{out} and efficiency. The equation is therefore;

$$P_{Diss} = \left[\frac{P_{out}}{\text{Efficiency}}\right] - P_{out}$$

The energy loss calculated from the above equation will be dissipated via the converter's baseplate in the form of heat. A key parameter in this equation is the converter efficiency. Efficiency will be dependent upon the line and load characteristics of the application.

The above calculation will yield the converter's power dissipation. For example;
Model: NB150SM/5-C
Output Power: 150 watts
Efficiency; 78% at 28 VDC line, 100% load (see tables in Performance Characteristics) assuming 5% safety factor efficiency is then 73%

$$P_{Diss} = \left[\frac{150}{0.73}\right] - 150 \qquad P_{Diss} = 55.48\text{ watts}$$

The maximum power dissipated from the converter under these conditions will be 55.5 watts.

1111 Knox Street ■ Torrance ■ CA 90502 ■ USA ■ Tel: +1 310 202 8820 ■ sales@martekpower.com

BLOCK DIAGRAMS

50 watt Channel(s)

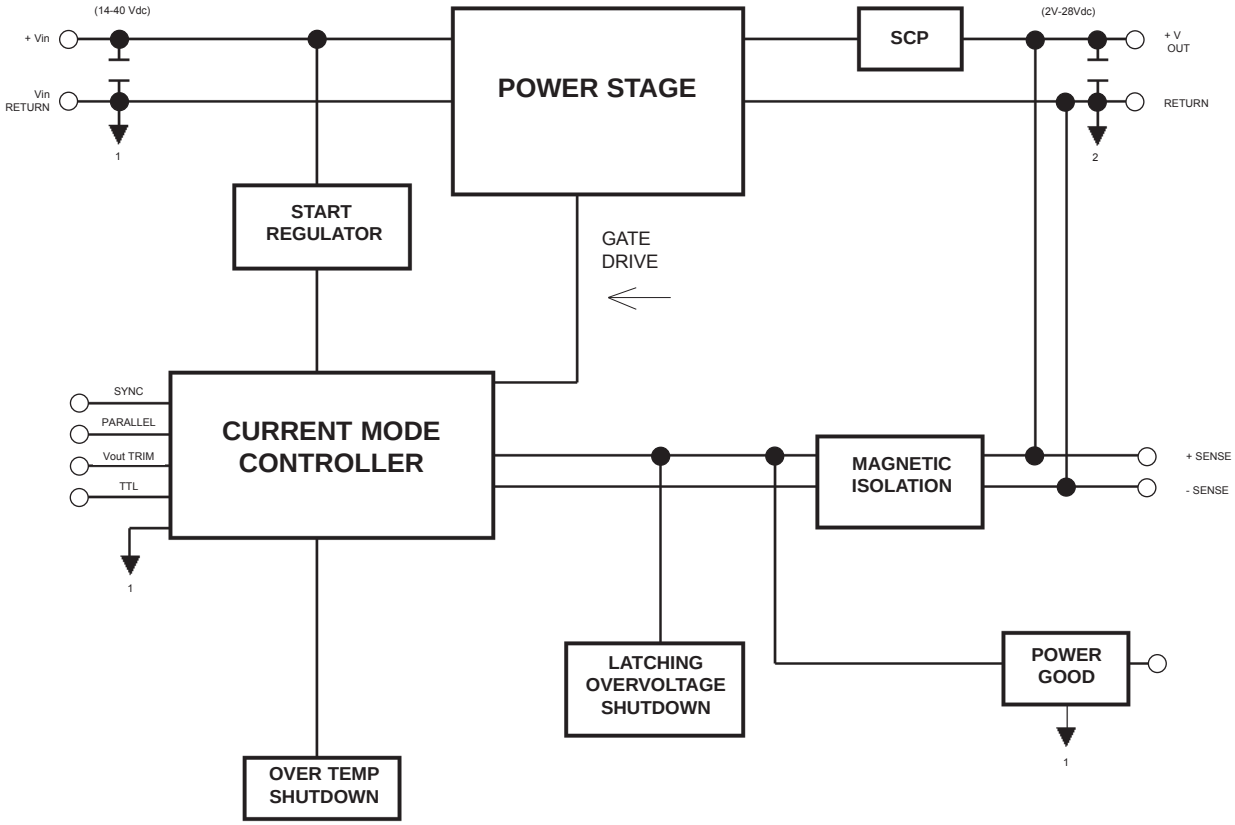

15 watt Channel(s)

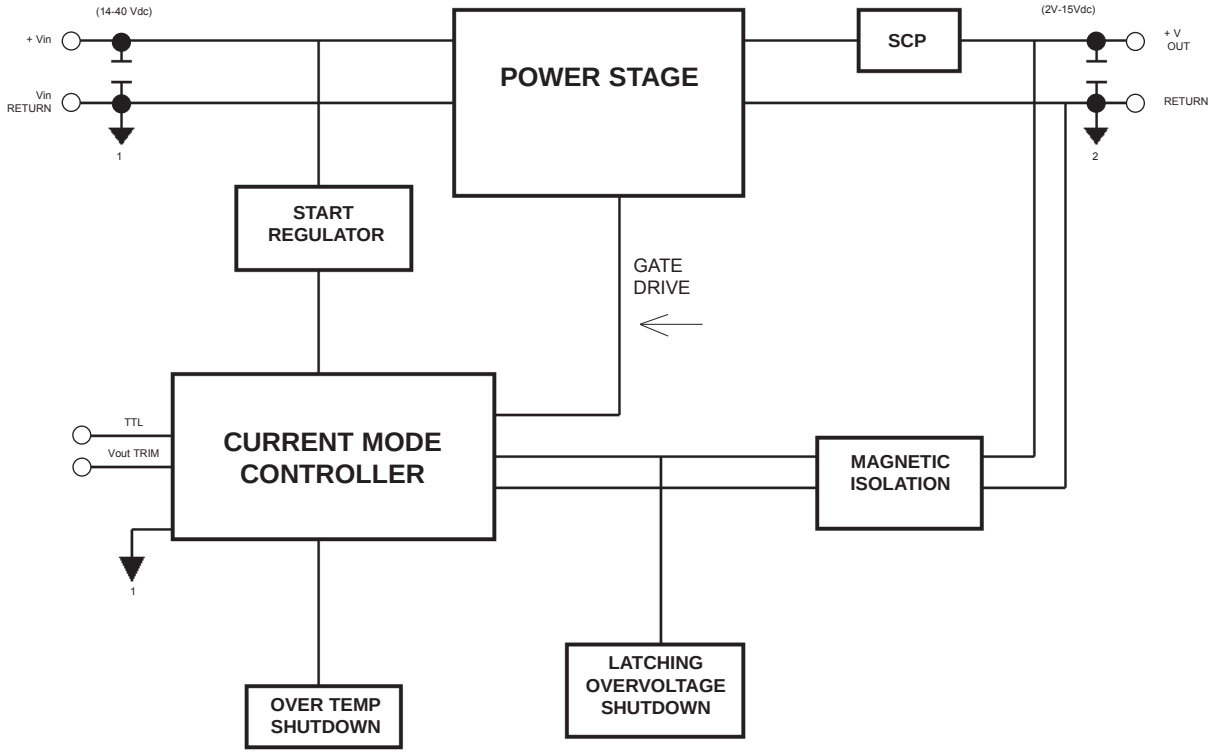

1111 Knox Street ■ Torrance ■ CA 90502 ■ USA ■ Tel: +1 310 202 8820 ■ sales@martekpower.com

NB50T

(TRIPLE OUTPUT, 25 WATT MAIN CHANNEL, 25 WATT AUX CHANNELS)

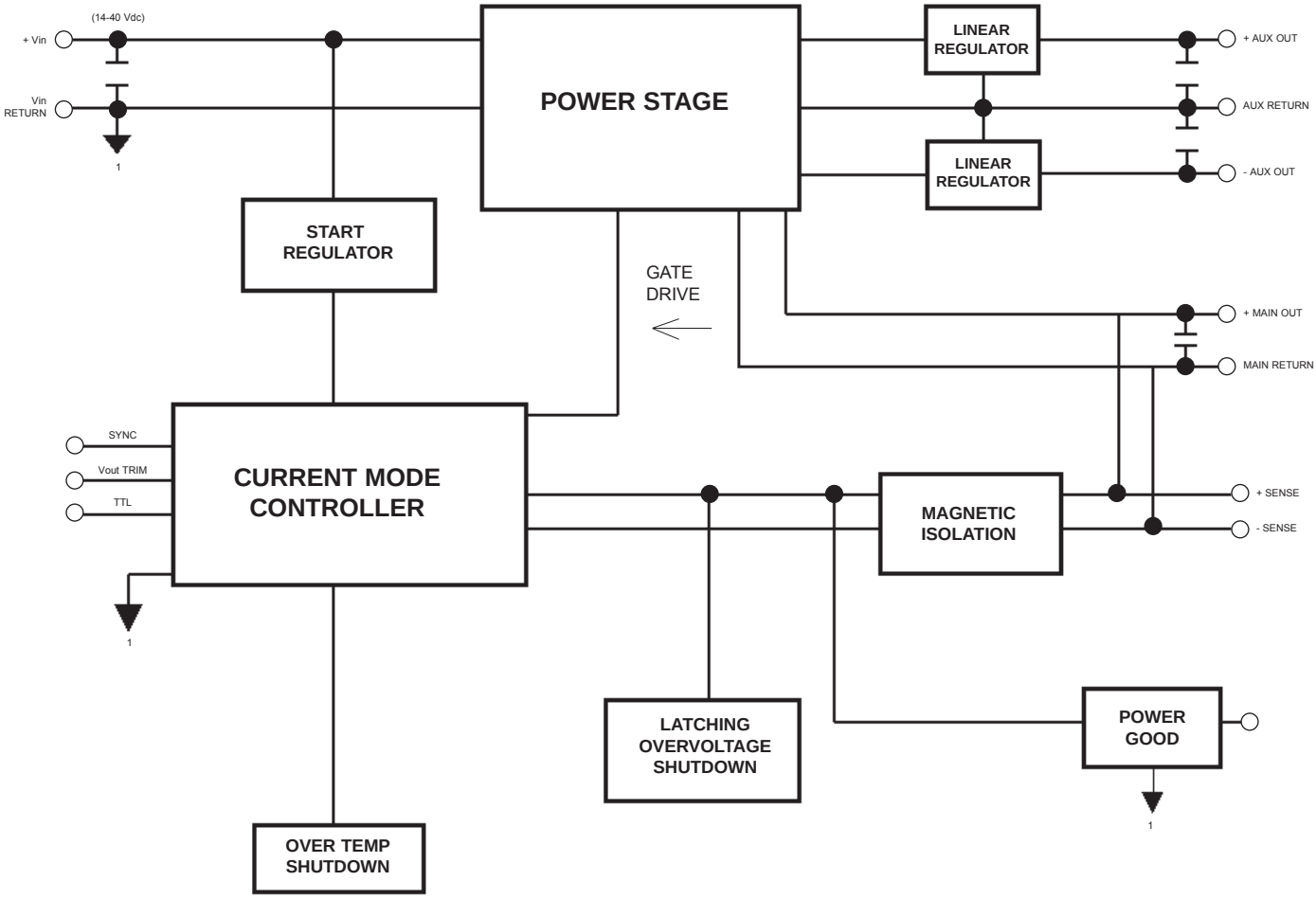

1111 Knox Street ■ Torrance ■ CA 90502 ■ USA ■ Tel: +1 310 202 8820 ■ sales@martekpower.com

Frequently Asked Questions

Q- Can I measure output voltage without any load connected to the unit?
A- Yes, all NB modules regulate to the specified output voltage under "no load' conditions.

Q- Can I connect the input to the output or to chassis ground?
A- Yes, the input, output and chassis are isolated up 250 VDC minimum (see specification sheet) and may be tied together in any manner.

Q- Are any additional components required to operate the NB modules?
A- No, the NB series was designed for full operational performance without the need for additional components.

Q- Are any additional components recommended to enhance operation?
A- This will depend on your application. For noise sensitive systems we would recommend the use of bypass capacitors in parallel with the output leads of the converter (low ESR type). This will reduce the effects of noise on the output lines. For applications where the power source is located a significant distance away for the converter modules it may be desirable to add bypass capacitors in parallel with the input leads. Lastly, series operation clamping diodes can be included to protect against reverse voltage conditions (see series operation note in the applications section).

Q- At the output of the converter I have a hold up capacitor in parallel with my load. Will this cause a problem?
A- It might! Though a small amount of capacitance in parallel with the output will improve (reduce) noise performance, if the capacitor is too large it may cause the converter to trip its' over load protection circuit. If this happens it will appear as a "no output" condition. If you suspect that this is happening we suggest you remove the hold up capacitor from the line. The converter will then recover immediately.

Q- The module's output voltage drops to zero at high temperature but when the unit cools down the output returns. What's causing this problem?
A- The thermal protection circuit (described in the Over Temperature Protection section in the Guide to Operation) is engaging. This circuit will activate when the baseplate exceeds it maximum operating temperature (71°C for industrial and 100°C for military versions). To verify this you must measure the temperature at the center of the baseplate with a calibrated temperature probe. The center is the converter's "hot spot" and is the monitoring point for the thermal protection circuit. Measurements taken at other locations of the device will be lower by as much as 10°C. Also, be sure that the probe is securely in contact with the converter's base minimizing contact with any other thermally conductive material while taking the measurement.

Q- How many NB modules can be used with each EMI filter?
A- The NBF EMI filters are not specified for a maximum number of units but rather a maximum output power capability. As long as the total power draw does not exceed the filter rating the filter will perform to specification.

Q- If I don't want to use some of the features of the NB converter (TRIM, TTL, PAR, SYNC or POWER GOOD) do I still have to connect the pins?
A- No, for full operating performance all that needs to be connected is the two (2) input pins, the two to six (2/6) output pins (depending on output power) and the two to six (2/6) sense pins connected to either the load or the respective +/- output pins. You MUST connect all output pins provided to ensure reliable operation. The remaining pins may be left open (or cut for mounting purposes).

Q- I need to use an input EMI filter in front of the converter. Do you have a suggested circuit?
A- Abbott offers passive EMI filters (NBF modules) that are designed to operate in conjunction with our modules to provide compliance to Mil-Std-461D, conducted emissions (CE101 and CE102) on the input leads. Many customers have successfully designed their own filter however, we advise care when doing so. Any circuit between the power source and the input to the converter has the potential to cause operational problems (such as filter/converter oscillations). In addition, any components in line with the converter will cause a voltage drop and this must be taken into account when considering low line operation. For example, the input to the NB50 series converter is 14 to 40 VDC. When an NBF50 filter is added in line with the converter the low line input voltage at the input of the filter should be at least 15 VDC to account for the 1.0 VDC drop between the filter and the converter.

Q- What level of transient protection is the NB series capable of withstanding?
A- The converter alone can withstand a transient of 50 VDC for 100 mS as described in Mil-Std-704D. If additional levels of protection are required (i.e., 80 VDC for 0.1 second per Mil-Std-704A) we recommend the use of the SM1275 transient suppression module (details available in SM series databook). The SM1275 module should be installed in series with the input of the converter. If you are utilizing an EMI filter the SM1275 module should be installed before the EMI filter.

1111 Knox Street ■ Torrance ■ CA 90502 ■ USA ■ Tel: +1 310 202 8820 ■ sales@martekpower.com

TRIM VALUES

2V Unit

	1.00%	2.00%	3.00%	4.00%	5.00%	6.00%	7.00%	8.00%	9.00%	10.00%
R2	4198	41980	41980	41980	41980	41980	41980	41980	41980	41980
R3	20000	20000	20000	20000	20000	20000	20000	20000	20000	20000
VOUT	2.02	2.04	2.06	2.08	2.1	2.12	2.14	2.16	2.18	2.2
R TRIM (50S)	408.6K	331.4K	277.7K	238.3K	208.1K	184.2K	164.8K	148.8K	135.4K	123.9K
R TRIM (100S)	204.3K	165.7K	138.9K	119.2K	104.0K	92.1K	82.4K	74.4K	67.7K	62.0K
R TRIM (150S)	136.2K	110.5K	92.6K	79.4K	69.4K	61.4K	54.9K	49.6K	45.1K	41.3K
R TRIM (15S)	418.6K	341.4K	287.7K	248.3K	218.1K	194.2K	174.8K	158.8K	145.4K	133.9K

3.3V Unit

	1.00%	2.00%	3.00%	4.00%	5.00%	6.00%	7.00%	8.00%	9.00%	10.00%
R2	16960	16960	16960	16960	16960	16960	16960	16960	16960	16960
R3	20000	20000	20000	20000	20000	20000	20000	20000	20000	20000
VOUT	3.33	3.37	3.4	3.43	3.47	3.5	3.53	3.56	3.6	3.63
R TRIM (50S)	126.0M	533.4K	368.2K	279.0K	208.8K	174.5K	149.2K	129.7K	109.8K	980.1K
R TRIM (100S)	629.9K	266.7K	184.1K	139.5K	104.4K	87.3K	74.6K	64.9K	54.9K	49.0K
R TRIM (150S)	419.9K	177.8K	122.7K	93.0K	69.6K	58.2K	49.7K	43.2K	36.6K	32.7K
R TRIM (15S)	1.27M	543.4K	378.2K	288.9K	218.8K	184.5K	159.2K	139.7K	119.8K	108.0K

5V Unit

	1.00%	2.00%	3.00%	4.00%	5.00%	6.00%	7.00%	8.00%	9.00%	10.00%
R2	9750	9750	9750	9750	16960	16960	16960	16960	16960	16960
R3	20000	20000	20000	20000	20000	20000	20000	20000	20000	20000
VOUT	5.05	5.1	5.15	5.2	5.25	5.3	5.35	5.4	5.45	5.5
R TRIM (50S)	760.0K	370.0K	240.0K	175.0K	136.0K	110.0K	91.4K	77.0K	66.7K	58.0K
R TRIM (100S)	380.0K	185.0K	120.0K	87.5K	68.0K	55.0K	45.7K	38.8K	33.3K	29.0K
R TRIM (150S)	253.3K	123.3K	80.0K	58.3K	45.3K	36.7K	30.5K	25.8K	22.2K	193.3K
R TRIM (15S)	770.0K	380.0K	250.0K	185.0K	146.0K	120.0K	101.4K	87.5K	76.7K	68.0K

12V Unit

	1.00%	2.00%	3.00%	4.00%	5.00%	6.00%	7.00%	8.00%	9.00%	10.00%
R2	3550	3550	3550	3550	3550	3550	3550	3550	3550	3550
R3	20000	20000	20000	20000	20000	20000	20000	20000	20000	20000
VOUT	12.12	12.24	12.36	12.48	12.6	12.72	12.84	12.96	13.08	13.2
R TRIM (50S)	270.14K	133.4K	84.3K	58.9K	43.5K	33.1K	25.7K	20.3K	15.6K	12.1K
R TRIM (100S)	135.4K	66.7K	42.1K	29.5K	21.8K	16.6K	12.8K	10.0K	7.8K	6.1K
R TRIM (150S)	90.3K	44.5K	28.1K	19.6K	14.5K	11.0K	8.6K	6.7K	5.2K	4.0K
R TRIM (15S)	280.9K	143.5K	94.3K	68.9K	53.5K	43.1K	35.7K	30.0K	25.6K	22.1K

15V Unit

	1.00%	2.00%	3.00%	4.00%	5.00%	6.00%	7.00%	8.00%	9.00%	10.00%
R2	2790	2790	2790	2790	2790	2790	2790	2790	2790	2790
R3	8250	8250	8250	8250	8250	8250	8250	8250	8250	8250
VOUT	15.15	15.3	15.45	15.6	15.75	15.9	16.05	16.2	16.35	16.5
R TRIM (50S)	219.1K	113.1K	74.5K	54.5K	42.3K	34.1K	28.1K	23.7K	20.2K	17.4K
R TRIM (100S)	109.6K	56.5K	37.2K	27.3K	21.2K	17.0K	14.1K	11.8K	10.1K	8.7K
R TRIM (150S)	73.0K	37.7K	24.8K	18.2K	14.1K	11.4K	9.4K	7.9K	6.7K	5.8K
R TRIM (15S)	217.4K	111.3K	72.7K	52.8K	40.6K	32.3K	26.4K	21.9K	18.4K	15.6K

24V Unit

	1.00%	2.00%	3.00%	4.00%	5.00%	6.00%	7.00%	8.00%	9.00%	10.00%
R2	1700	1700	1700	1700	1700	1700	1700	1700	1700	1700
R3	8250	8250	8250	8250	8250	8250	8250	8250	8250	8250
VOUT	24.24	24.48	24.72	24.96	25.2	25.44	25.68	25.92	26.16	26.4
R TRIM (50S)	122.3K	64.1K	41.8K	30.0K	22.7K	17.8K	14.2K	11.5K	9.3K	7.6K
R TRIM (100S)	61.1K	32.1K	20.9K	15.0K	11.4K	8.9K	7.1K	5.7K	4.6K	3.8K
R TRIM (150S)	40.7K	21.4K	13.9K	10.0K	7.6K	5.98K	4.78K	3.8K	3.1K	2.5K
R TRIM (15S)	120.5K	62.4K	40.1K	28.3K	21.0K	16.0K	12.4K	9.71K	7.58K	5.86K

28V Unit

	1.00%	2.00%	3.00%	4.00%	5.00%	6.00%	7.00%	8.00%	9.00%	10.00%
R2	1440	1440	1440	1440	1440	1440	1440	1440	1440	1440
R3	8250	8250	8250	8250	8250	8250	8250	8250	8250	8250
VOUT	28.28	28.56	28.84	29.12	29.4	29.68	29.96	30.24	30.52	30.8
R TRIM (50S)	190.1K	73.6K	43.3K	29.4K	21.4K	16.2K	12.5K	9.8K	7.8K	6.1K
R TRIM (100S)	95.0K	36.8K	21.6K	14.7K	10.7K	8.1K	6.3K	4.9K	3.9K	3.1K
R TRIM (150S)	63.4K	24.5K	14.4K	9.8K	7.1K	5.4K	4.2K	3.3K	2.6K	2.0K
R TRIM (15S)	188.3K	71.8K	41.5K	27.6K	19.6K	14.4K	10.8K	8.08K	6.01K	4.36K

1111 Knox Street ■ Torrance ■ CA 90502 ■ USA ■ Tel: +1 310 202 8820 ■ sales@martekpower.com