The RB, RW and RM series of power supplies were designed as military grade, stand alone devices requiring no external components for operation. The entire series are 160 to 200 kHz, fixed frequency, switching power supplies. The series utilizes either push-pull forward or single ended forward converter topologies. Control is accomplished via pulse width modulation in a current mode control scheme.

These models are all encased in five sided steel enclosures to minimize radiated noise. All models in these series contain internal EMI filters for compliance to MIL-STD-461 for conducted emissions on the input leads. Certified tests reports characterizing EMI performance are available upon request. The RB, RW and RM series comply with the NAVMAT guidelines for component derating. Environmental Stress Screening (ESS) per the NAVMAT guidelines is also available as an option.

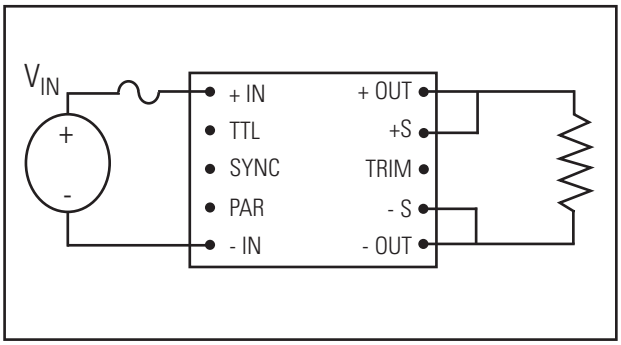

Figure 1

The most basic use of the power converter is shown in Figure 1. An input fuse is always recommended to protect both the source and the power supply in the event of failures. Bus fuse type MDX or equivalent slow-blow is recommended with a current rating approximately 200% of the full load input current to the converter. Having a slow-blow type fuse will allow for the converter's inrush charge at turn-on. The sense pins of the converter must be connected to their corresponding output bus. Inherently, power converters will have some internal energy loss, which is dissipated in the form of heat through an aluminum mounting surface. This surface must be cooled to maintain a temperature below the maximum operating temperature.

Wire Gauge and Distance to Load

If the resistance of the wire, printed circuit board runs or connectors used to connect a converter to system components is too high, excessive voltage drop will result between the converter and system components, degrading overall system performance.

For example, if the DC/DC converter in Figure 1a is a 50W unit (5 Vdc @ 10 Amps) with output load regulation specified at 0.2%; the connection as shown will degrade load regulation by a factor of 10. In this example, the 4 feet of #14 AWG wire used to connect the converter output to the load, has a total line resistance of 10mW (ignoring any contact resistance). For a 50W, 5 Vdc output converter, the drop across the lead resistance will be 100mV (10 A X 0.010W) or 2% of the output. Thus, the converter is selected for 0.2% regulation, but the power system layout achieves only 2.2%.

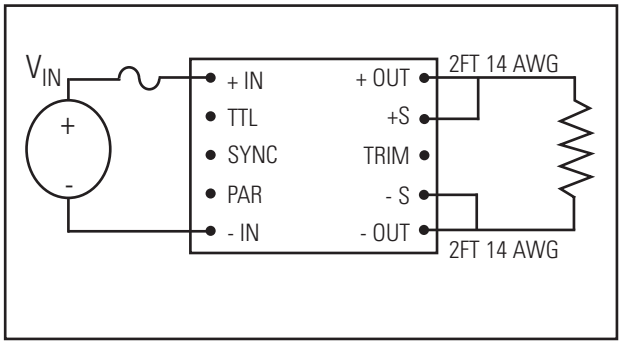

Figure 1a

This can be corrected by decreasing the distance between the converter output and load. If that is not possible, using larger diameter wire (see Table 1) or PCB runs that have a larger cross sectional area and shorter length will also reduce conductor resistance. The use of the converter's remote sense capability will also work (see remote sense for more information on this option).

Note: **High IR drops between the converter and load may cause converter parameters (such as output voltage accuracy, remote sensing supplies, etc. to appear to be out of specification. High IR drops on input lines may cause start up problems (voltage at the input pins below the input range of the converter).**

All specifications are typical @+25°C with nominal input voltage under full output load conditions, unless otherwise noted. Specifications subject to change without notice.

1111 Knox Street ■ Torrance ■ CA 90502 ■ USA ■ Tel: +1 310 202 8820 ■ sales@martekpower.com

Obviously, any connections made to the power distribution bus present a similar problem. Poor connections (such as micocracking around solder joints) can cause serious problems such as arcing. Contact resistance must minimized. Proper workmanship standards must be followed to insure reliable solder joints for board mount converters. Terminal strips, spade lugs and edge connectors must be free of any corrosion, dust or dirt. If parallel lines or connections are available for routing converter output currents, they should be utilized.

# AWG	Current Resistance (mΩ/Foot)	#AWG	Current Resistance (mΩ/Foot)
9	0.792	21	12.77
10	0.998	22	16.20
11	1.261	23	20.30
12	1.588	24	25.67
13	2.001	25	32.37
14	2.524	26	41.02
15	3.181	27	51.44
16	4.020	28	65.31
17	5.054	29	81.21
18	6.386	30	103.7
19	8.046	31	130.9
20	10.13	32	162.0

Table 1

Ripple and Noise

Output ripple and noise (sometimes referred to as PARD or "Periodic and Random Deviations") can be defined as unwanted variations in the output voltage of a power supply. In switching power supplies this output noise is seen as a series of pulses with a high frequency content and is therefore measured as peak value (i.e., specified as "peak-to-peak".)

The RB, RW, and RM series power supplies are specified and tested in our factory with a 25 MHz bandwidth oscilloscope. Measurements taken by a scope set a higher frequencies (i.e., 300 MHz) may produce significantly different results due to noise coupling on to the probe from sources other than the power supply.

The length of all measurements leads (especially the ground lead) should be minimized and the sense pins should be tied to their respective outputs (+Sense to +Vout). We recommend measurement as close to the power supply as possible. This can be accomplished by connecting a short bus wire (generally 0.5 inch or less, making a loop at the end to place at the probe) to the negative and positive outputs on the back side of the connector mate, then place the tip of the probe on the +output and the ground ring (or ground band) on the - output for a true ripple measurement. This is displayed in Figure 1b below.

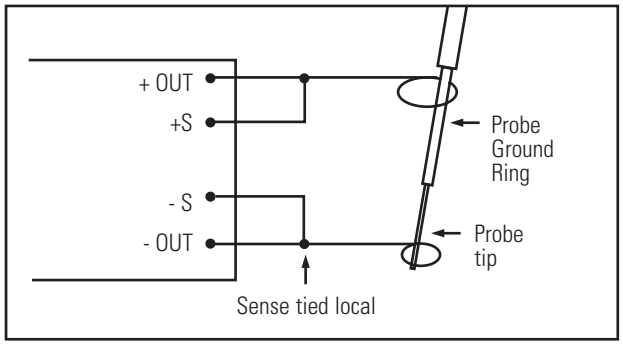

Figure 1b

Utilizing the probe ground ring (as opposed to a ground wire) will minimize the chance of noise coupling from sources other than the power supply. If this is not practical or possible then attached a 6 to 8 inches twisted pair wire to the outputs of the power supply and place a 10 to 20 μF tantalum capacitor (low ESR type, with an appropriate voltage rating) across the load. This test method is shown on Figure 1c.

All specifications are typical @+25°C with nominal input voltage under full output load conditions, unless otherwise noted. Specifications subject to change without notice.

1111 Knox Street ■ Torrance ■ CA 90502 ■ USA ■ Tel: +1 310 202 8820 ■ sales@martekpower.com

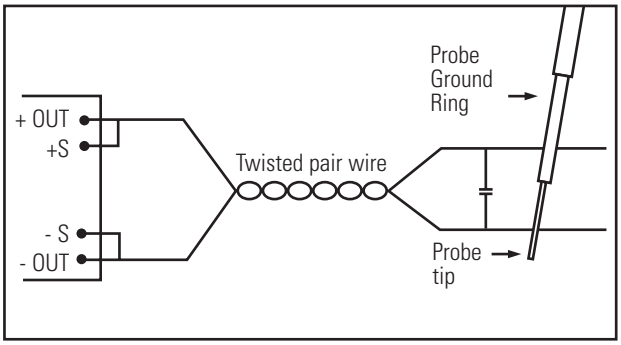

Figure 1c

This test method will enable a remote measurement and eliminate any noise that my couple on to the extended leads coming off the converter.

Remote Sense

Remote sense pins, +S and - S have been provided on the RB, RW and RM Series for applications where precise load regulation is required a distance from where the converter is physically located. If remote sensing is NOT required, these pins **MUST BE tied** to their respective output pins (+S to +OUT, - S to - OUT). If one or more of these sense pins are not connected to their respective output pins, the output(s) of the unit will not regulate to within specification and may cause a high output voltage condition.

DO NOT connect sense pins to any pin other than their respective output pins or permanent damage will occur.

DO NOT disconnect the output pins while the sense pins are still tied to the load and powered or permanent damage will occur.

DO NOT connect sense pins to any load other than the same load the output pins are connected to or permanent damage may occur.

The internal remote sense circuit is designed to compensate for a maximum of 0.5 V difference (0.25 V in each output lead) in voltage between the load and the power converter. Longer output leads or traces are required to be of sufficient gauge or width to maintain the voltage drop across them of 0.5 V maximum at rated load current.

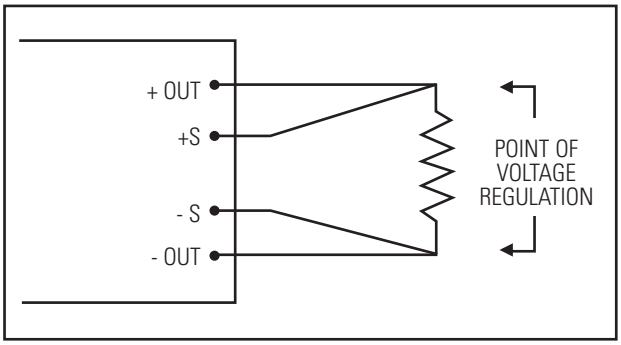

Figure 2: Remote Sense - Single Output

Parallel Operation

(100 and 200 Watt Modules only)

The RB, RW and RM Series have the capability of being paralleled to drive loads of higher power than a single unit can handle. The PAR pin is supplied on the unit for this function. If parallel operation of two or more units is required, the following precautions must be followed.

- Corresponding input and output leads or traces on each unit should be as equal in length and size as practical. The more equivalent the leads are the closer the current sharing.

- The leads connecting the PAR, +S and -S pins may need to be shielded to avoid high frequency noise interference in very high power applications.

- The PAR pins of all units should be tied together.

Or'ing diodes may be included in the positive output leads for true N+1 redundant systems, but are not necessary. Local sensing should be used whenever possible to minimize noise on +S and -S pins in parallel applications. Though this feature is available only on 100 and 200 watt modules, parallel operation can be between either (i.e. 100 watt unit tied to a 200 watt for 300 watts).

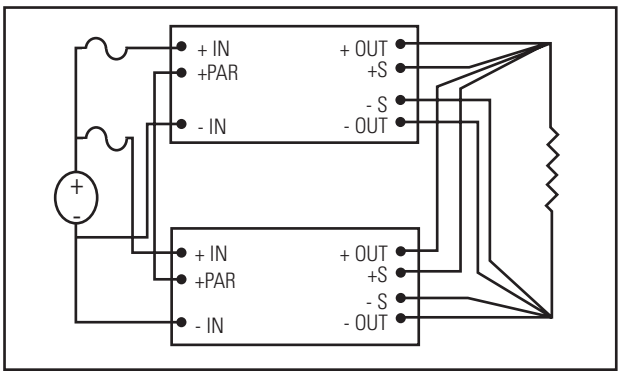

Figure 1c: Parallel Operation

All specifications are typical @+25°C with nominal input voltage under full output load conditions, unless otherwise noted. Specifications subject to change without notice.

Series Operation

The RB, RW and RM Series of power supplies may be arranged in a series operating mode to supply higher output voltages when required (see Figure 4). In this configuration D1 and D2 are added to protect against the application of a negative across the outputs of the power converters during power up and power down. The two (or more) units need not have the same output voltage, but the output current supplied in this configuration will be limited to the lowest maximum output current of the modules used.

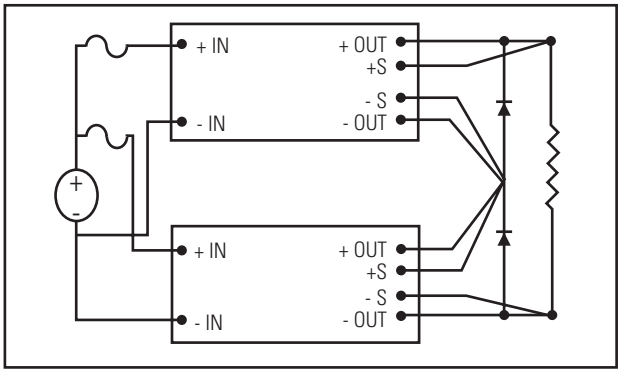

Figure 4: Series Operation

Dual Output (+/-) Operation

(35 and 50 Watt Dual Outputs only)

The RB, RW and RM are available as dual (two channel) configurations for 35 and 50 watt modules (only). The two channels are completely independent and can be operated as either positive channels, negative channels or both (i.e., standard +/- configurations).

To operate the modules in the standard +/- configuration tie the positive rail of the first channel to the negative rail of the second channel and use this point as the reference ground as shown in Figure 5.

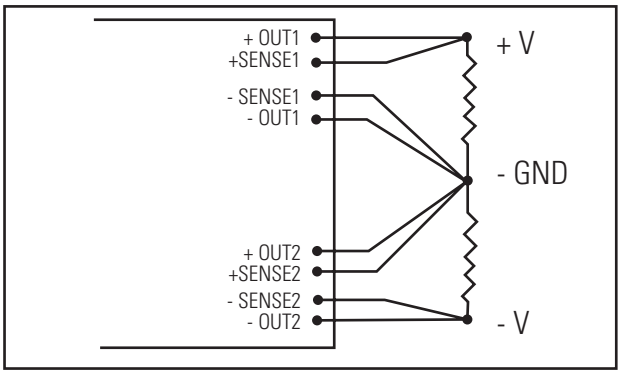

Figure 5: Dual Output (+/-) Operation

Additionally, since the modules offer two independent, isolated outputs it is possible to offer any combination of output voltages between 5 and 15 Vdc in one module i.e., a 5 Vdc and 5.2 Vdc in one common box. Consult factory for detail.

All specifications are typical @+25°C with nominal input voltage under full output load conditions, unless otherwise noted. Specifications subject to change without notice.

1111 Knox Street ■ Torrance ■ CA 90502 ■ USA ■ Tel: +1 310 202 8820 ■ sales@martekpower.com

Remote On/Off

The RB/RW/RM Series contains a remote on/off (TTL) feature. This allows control of the output power using a TTL level signal. The RB/RW/RM series +TTL and -TTL pins are isolated from all other signals, allowing them to be referenced to either input or output grounds. The TTL pins are tied to the input of an optocoupler that is limited to 10 mA maximum at logic level 1 (or 5 volts) inputs.

The unit will be on if the TTL pins are left floating (untied) or if they are shorted together. The output remains on if a logic level 0 (less than 0.8 volts) is applied at the +TTL pin with respect to the - TTL pin. Application of a logic level 1 at the +TTL pin with respect to the - TTL pin will inhibit the output.

-ER Option

The "-ER" (Enhanced Reliability) option for the RB, RW and RM series upgrades the component parts from hermetic/Mil-grade to full military grade. Active devices upgrade to JAN, JANTX or MIL-STD-883 (wherever possible) and passive components upgrade to "M" level or better (wherever possible). The net result is typically a 2 to 3 times improvement in Mean Time Between Failure (MTBF) calculations per MIL-HDBK-217. No dimensions or electrical specifications will be changed. Exact calculations can be obtained displaying the impact of this option on the MTBF for a specific model. This option is not recommended for new designs. Please contact factory for details.

Military Specifications; Environmental Qualifications

Specification	Condition	Method	Procedure	Test Condition
MIL-STD-704D	Input Transient			Transients up to 50Vdc for 0.1 sec (28 Vdc input Transients up to 180 Vac for 0.1 sec (115 Vac input)
MIL-STD-810C	Vibration	514.2	1	Up to +/- 15gs, each axis for 3 hours +E23
MIL-STD-810C	Humidity	507.3	1	95% humidity, non-condensing for 10 days
MIL-STD-810C	Temp/Altitude	504.1	1	-55°C to +71°C @ 70,000 feet (category 6)
MIL-STD-810C	Acceleration	513.2	2	14 gs each axis
MIL-STD-810C	Mechanical Shock	516.2	1	Up to 40gs, each axis for 11ms
MIL-S-901C	High Impact Shock			5 feet hammer drop, each axis

Certified test reports are available upon request.

All specifications are typical @+25°C with nominal input voltage under full output load conditions, unless otherwise noted. Specifications subject to change without notice.

1111 Knox Street ■ Torrance ■ CA 90502 ■ USA ■ Tel: +1 310 202 8820 ■ sales@martekpower.com