Guide to Operation

I. Electrical Description

The PF series are Single-Phase, Wide-AC Input Active-Power Factor Correction & Harmonic Attenuation Modules. This family of front end modules utilize the continuous mode non-isolated boost topology which has the advantage of boosting to a regulated dc output (380Vdc) higher than the peak of the ac input voltage and as a result maintain longer hold up time for the downstream dc-dc converters. This series of modules can maintain a high power factor close to unity by forcing the input current to follow the shape of the input voltage waveform, and by eliminating any phase difference between both the input current and the input voltage.

The PF series of modules reduce the input harmonic distortion level to meet MIL-STD-1399 requirements. Non sinusoidal waveforms typically contain a fundamental waveform and higher frequency harmonics that contain high percentage of the fundamental. Reducing harmonics distortion is accomplished by forcing the input current waveform to become sinusoidal in shape resulting in a fundamental waveform and low harmonic contents.

These modules operate at a constant frequency of 80kHz to simplify EMI requirements. PFC1000 utilizes a "lossless" passive snubber to reduce voltage stress on components and to minimize noise. Companion filter modules (PFF500 & PFF1000) are available to meet MIL-STD-461 requirements.

PF500 is supplied as a Full Brick product and requires the addition of output storage capacitance. Both PFC500 & PFC1000 are supplied with storage capacitance of 495µF & 1000µF respectively. All three products contain inrush current limiting.

PF100 operates in Continuous Current mode at 250 kHz fixed switching frequency. With no stress/spikes on switching components higher efficiency and better EMI is achievable without external filter. This model has a dual voltage setting for its output and requires 100µF external capacitor to deliver 100 watt power. At low input voltages ranging between 85-150 Vrms nominal output is set to 273Vdc. At higher input voltages ranging between 180-265 Vrms nominal output is set to 380Vdc. Output short circuit protection and On/Off features are additional benefits for PF100 units. This model has an Input Voltage Sense Circuit and output voltage setting is automatic. See Figure 1a on page 27 for basic application set up. On/Off input will sink 1mA current at 5V TTL connected directly across pins 6-5. High TTL On/Off voltage will disable downstream DC-DC converter outputs if connected according to Figure 3a on page 29. Low TTL or floating On/Off pins will unable DC-DC converter outputs.

II. Mechanical Description

General

PF100 is a half brick module and is housed in nickel plated CRS case and Aluminum Alloy baseplate for better heat transfer. The standard model comes with four # 4-40 mounting inserts on the baseplate with the options for Metric M-2.5 screws as well as 0.140 DIA through hole inserts.

PF500 is housed in a standard full-brick steel case (4.6"x2.4"x0.5") with Aluminum Alloy baseplate to facilitate heat transfer. This model comes with two options for pin placement; a standard option where all pins are placed on top of the unit or the option of placing pins on baseplate. The baseplate comes with four standard mounting inserts # 6-32 and an option for Metric M3-0.5 inserts to be used with metric screws. Users have the options to relocate mounting holes. Non standard requirements have to be specified in the part designation.

PFC500 is housed in a rectangular black anodized Aluminum Alloy case (7.0"x3.25"x1.75") and Aluminum Alloy baseplate to facilitate heat transfer. This model comes with terminal connections on its input and output sides (# 6-32 screws). The baseplate comes with four standard mounting inserts # 10-32, and an option for Metric M3-0.7 inserts to be used with metric screws.

1111 Knox Street ■ Torrance ■ CA 90502 ■ USA ■ Tel: +1 310 202 8820 ■ sales@martekpower.com

PFC1000 is housed in a rectangular black anodized Aluminum Alloy case (7.0"x6.5"x1.75") and Aluminum Alloy base-plate to facilitate heat transfer. This model comes with terminal connections on its input and output sides (# 6-32 screws). The baseplate comes with four standard mounting inserts # 10-32, and an option for Metric M3-0.7 inserts to be used with metric screws.

The PF family modules are high efficiency products and thus reduce heat-sinking requirements.

Installation and Mounting

Before mounting the module, be sure that the mounting surface and module baseplate are clean. Heat sink mounting surfaces must be smooth, flat to within 0.005 and cover the entire baseplate of the converter. Based on the calculated power dissipation (see Application Notes on Common Equations for sample calculation) the heatsink should have adequate heat dissipation characteristics. To facilitate heat transfer, apply thermal compound to the base of the module before mounting it to the heat sink. It is extremely important to achieve a good thermal interface between the base of the converter and the heatsink. We highly recommend the use of thermal grease or some other type of conducting material. Failure to achieve a good thermal interface may result in damage to the modules.

III. Military Specifications

Specification	Condition	Method	Procedure	Test Condition
MIL - STD - 704E	Voltage Transient			180V/10ms
MIL - STD - 810F	Vibration	514.5	1	Up to 10gs, each axis for 1 hour
MIL - STD - 810F	Humidity	507.4		95% humidity, non-condensing for 10 days
MIL - STD - 810F	Temp/Altitude	520.2	3	40 hours from -40°C to +71°C
MIL - STD - 810F	Acceleration	513.5	2	14gs each axis
MIL - STD - 810F	Temperature Shock	503.4		-55°C to +105°C (non-operating, 1 hour each cycle)
MIL - S - 901D	High Impact Shock	Grade A, Class I	Type A	5 foot hammer drop

The military version of PF & PFC are designed to meet the following military environmental specifications:

Certified test reports are pending.

PF & PFC series of modules are designed to meet CE01 and CE101 without companion filters. When used with the designated EMI filter, the PF and PFC series meet the requirements of MIL-STD-461C & MIL-STD-461E for conducted emissions/interference on the input power leads [CE01 (30Hz-15kHz) and CE03 (15kHz-50MHz)] for MIL-STD-461C, [CE101 (30Hz-10kHz) and CE102 (10kHz-10MHz)] for MIL-STD-461E. In addition, the modules are designed to meet MIL-STD-461E for radiated interference [RE101 (Magnetic field, 30Hz-100kHz), RE102 (Electric field (10kHz-18GHz)], conducted susceptibility [CS101 (30Hz-150kHz), CS114 (10kHz-200MHz), CS115 (Impulse excitation) and CS116 (damped sinusoidal transient)] and radiated susceptibility [(RS101 (Magnetic field 30Hz-100kHz), RS103 Electric field 2MHz-40GHz)]. Full test reports pending.

IV. Product Features

AC Power Good signal (AC OK)

The AC power good signal is provided by an optically coupled open collector circuit that indicates the AC input voltage is present or not. When the input voltage is above 80±4V, the optically coupled output transistor is off. When the input voltage is below 80±4V, the optically coupled output transistor is on. This signal becomes active when the internal bias of the unit is developed at around 30Vrms. Prior to the development of the internal bias, the output of this signal is high impedance.

1111 Knox Street ■ Torrance ■ CA 90502 ■ USA ■ Tel: +1 310 202 8820 ■ sales@martekpower.com

DC Power Good/Built-in test signal (DC OK)

A DC power good signal is provided to allow for the monitoring of the output voltage. Same as the AC good signal's output, the output stage of this signal is an optically coupled open collector. The optically coupled transistor is off when the output voltage is between 350±10V and 410±5V. The optically coupled transistor is on when the output voltage is less than 180±10V or higher than 410±5V. This signal becomes active when the internal bias of the unit is developed at around 30Vrms. Prior to the development of the internal bias, the output of this signal is high impedance.

For PF100 output stage of DC OK (DC Power Good) signal is optically coupled open collecter NPN transistor. This transistor if off when output voltage is more than 255 VDC. Return of DC OK signal (pin #3) may be connected to return of DC output (pin #7) or user isolated from the output. It is not recommneded to connect returns of DC OK and On/Off together.

Over Temperature Protection

An over temperature shut down circuit is provided to protect the converters from being over heated. When the temperature, at the center of the baseplate is above the rated high operating temperature, the unit will automatically shut down. Once that temperature is reduced to about 85% of the rated high operating temperature, power will be automatically restored.

Output Over Voltage Protection

The PF1000 module provides an internal "non-latching" overvoltage protection circuit. Should an overvoltage condition occur, the module will maintain the output voltage below 415±10V.

The PF100 module which have 273 Vdc or 380Vdc outputs, depending on AC input voltage, overvoltage condition will occur when output voltage exceeds 5% of its nominal value. If output voltage exceeds its nominal value by less than 8% output voltage will decrease, if output voltage exceeds by more than 8% of its nominal value the module will not boost the input voltage reducing its output to rectified input voltage value.

V. Reliability

Reliability Calculation

In order to achieve superior reliability, the design of the module adhere to the stringent component derating guidelines of NAVMAT P4855-1. The following table is the tabulated Mean Time Between Failure (MTBF) for PF500/PFC500/PFF500 military (M-Grade) and industry grade (I-Grade) calculated per MIL-HBDK-217F Notice 2 under nominal input / full load for Ground Benign at 50°C .

MODELS	M-Grade 115Vrms Input	I-Grade 115Vrms Input	M-Grade 220Vrms Input	I-Grade 220Vrms Input
PF500	1,168,110	336,256	1,137,830	327,750
PFC500	1,024,280	318,910	1,000,920	311,250
PFF500	23,429,600	8,290,820	22,609,300	7,978,960

1111 Knox Street ■ Torrance ■ CA 90502 ■ USA ■ Tel: +1 310 202 8820 ■ sales@martekpower.com

The following table is the tabulated Mean Time Between Failure (MTBF) for PFC1000 industry grade (I-Grade) calculated per MIL-HBDK-217F Notice 2 under nominal input / full load for different environmental factor with different temperature. The first column lists all the environmental factors and that the first row lists the operating temperature from 0 degree C (0°C) to 80 degree C (80°C).

PFCI-1000	0 °C	10 °C	20 °C	30 °C	40 °C	50 °C	60 °C	70 °C	80 °C
GB	878,835	689,396	525,404	387,464	275,971	190,156	127,436	83,715	54,368
GF	187,366	145,913	112,764	86,483	65,804	49,655	37,149	27,556	20,276
GM	85,500	69,084	55,195	43,652	34,206	26,583	20,504	15,708	11,961
MF	54,140	44,503	36,323	29,444	23,710	18,967	15,073	11,901	9,334
ML	22,635	18,674	15,299	12,456	10,087	8,132	6,530	5,228	4,174
CL	1,500	1,273	1,072	897	747	618	510	420	345
SF	1,566,700	1,206,210	886,538	620,095	414,112	266,525	167,417	103,928	64,418
AIC	80,368	64,695	51,873	41,427	32,942	26,064	20,505	16,026	12,437
AIF	43,799	34,961	27,927	22,332	17,873	14,310	11,453	9,155	7,303
ARW	31,073	25,482	20,749	16,788	13,507	10,814	8,620	6,847	5,420
AUC	50,991	40,796	32,528	25,856	20,493	16,195	12,760	10,021	7,845
AUF	28,359	22,615	18,046	14,415	11,528	9,228	7,392	5,923	4,745
NS	110,040	89,220	71,915	57,617	45,854	36,212	28,344	21,965	16,842
NU	44,494	36,685	30,112	24,616	20,043	16,251	13,115	10,530	8,406

1111 Knox Street ■ Torrance ■ CA 90502 ■ USA ■ Tel: +1 310 202 8820 ■ sales@martekpower.com

The following table is the tabulated Mean Time Between Failure (MTBF) for PFC1000 industry grade (M-Grade) calculated per MIL-HBDK-217F Notice 2 under nominal input / full load for different environmental factor with different temperature. The first column lists all the environmental factors and that the first row lists the operating temperature from 0 degree C (0°C) to 80 degree C (80°C).

PFCM1000	0 °C	10 °C	20 °C	30 °C	40 °C	50 °C	60 °C	70 °C	80 °C
GB	2,293,210	1,902,470	1,537,480	1,206,110	915,864	672,659	478,837	332,022	225,797
GF	545,830	434,757	342,702	267,656	207,307	159,342	121,608	92,200	69,485
GM	225,965	188,742	155,318	126,095	101,155	80,319	63,229	49,424	38,412
MF	146,643	123,857	103,564	85,784	70,439	57,378	46,400	37,275	29,767
ML	60,158	51,079	42,918	35,720	29,480	24,158	19,681	15,960	12,897
CL	3,851	3,358	2,900	2,482	2,107	1,775	1,486	1,238	1,027
SF	4,312,120	3,526,460	2,774,120	2,087,690	1,500,290	1,033,240	687,705	447,266	287,373
AIC	234,209	192,305	156,872	127,227	102,632	82,368	65,767	52,240	41,276
AIF	130,214	105,862	85,859	69,539	56,277	45,520	36,799	29,727	23,988
ARW	83,594	70,482	58,802	48,589	39,811	32,385	26,187	21,075	16,898
AUC	148,915	121,361	98,274	79,145	63,446	50,663	40,323	32,005	25,343
AUF	85,285	69,044	55,774	44,998	36,284	29,255	23,591	19,029	15,354
NS	313,425	260,352	214,477	175,334	142,278	114,597	91,590	72,607	57,072
NU	121,211	102,689	86,344	72,112	59,858	49,407	40,564	33,132	26,923

1111 Knox Street ■ Torrance ■ CA 90502 ■ USA ■ Tel: +1 310 202 8820 ■ sales@martekpower.com

Standard Military Grade Module Screening

Each military grade module under goes environmental screening based upon the parameters outlined in MIL-STD-883 and NAVMAT P4855-1. The screening and process steps consist of the following;

1- Stabilization Bake; +105°C for 24 hours per MIL-STD-883, M1008.2 Condition B
2- Voltage Isolation and Parametric Testing at 25°C
3- Module encapsulation and sealing
4- Temperature Cycling (non-operational); 10 cycles minimum, at -55°C to +105°C, 36 minute transition with a 1 hour dwell at each temperature extreme. Procedure reference MIL-STD-883, M1010, condition B and NAVMAT P4855-1.
5- Voltage Isolation and Parametric Testing at 25°C
6- Long Term Operational Burn In; 160 hours of powered operation under load. Modules are continuously cycled from +85°C to thermal shut down point (+105°C) during the 160 hours.
7- Voltage Isolation and Parametric Testing at 25°C
8- Visual Inspection

Additional testing is available including parametric testing at temperature or extended burn in time. Consult factory for more information. Additional testing or customer specific testing will require additional charges.

Accelerated Life Testing

An accelerated life test was performed on representative sample units of the modules to determine the long-term effects on performance. Units were subjected to 500 thermal cycles (non-operational) of -55°C to +105°C. At every 50th cycle, modules were given full parametric testing. At the conclusion of the 500th cycle all modules were found to operate within published specifications.

1111 Knox Street ■ Torrance ■ CA 90502 ■ USA ■ Tel: +1 310 202 8820 ■ sales@martekpower.com

General Application Notes

The PF & PFC series are active power modules that convert a single phase, wide range of voltage (85V - 265V) and frequency (47Hz - 440Hz) AC input to a regulated 380 VDC output with very high input power factor. The high input power factor is achieved by forcing its input current to follow the wave-form of the input voltage. The switching frequency of these modules is fixed at about 80kHz. Fixed frequency operation would greatly simplify EMI filtering design. A companion EMI module, PFF1000, is available.

The high efficiency of these modules reduces heat dissipation and minimizes heat sinking requirements i.e., typical dissipation of the 1000 watt module operation at full load will be between 30 and 50 watts. Though this reduces heat-sinking requirements, the baseplate temperature must be maintained below +100°C or permanent damage may occur. See installation and mounting instructions.

A number of protection features, as well as electrical and thermal derating of internal components allows for high reliability throughout the entire operating range of -40 °C to +100 °C. All - 40 °C to +100 °C units. "M" level modules are fully screened in accordance with MIL-STD-833. Qualification test reports to MIL-STD-810F and MIL-STD-901D - pending.

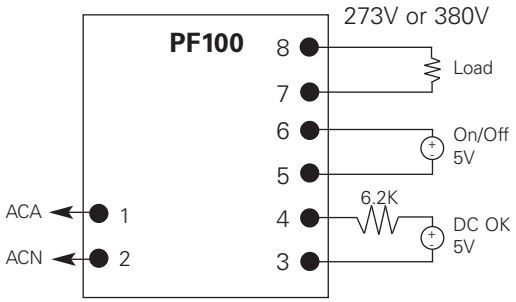

Figure 1a. PF100 Basic Application Setup

The most basic use of the power module is shown in Figure 1a and 1b. An input fuse is always recommended to protect both the source and the module in the event of failures. Bus fuse type FWC or equivalent with the appropriate rating is recommended for use. Contact Martek Power for recommendations. Pull up resistor allows for a maximum of 0.75mA sink current thru the saturated optocoupler detector. Saturation voltage is around 0.2V.

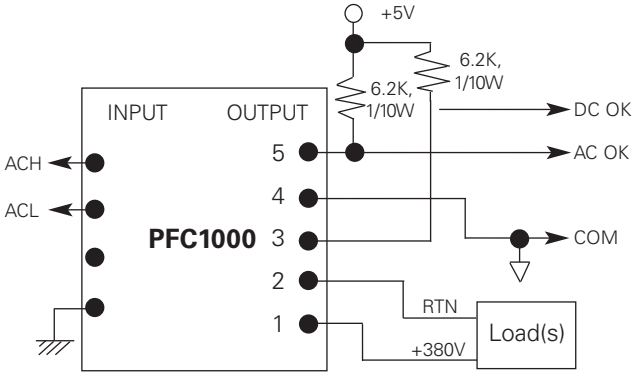

Figure 1b. PF1000 Basic Application Setup

Notes: 1. To prevent internal damage to PF500/PFC500, AC input of 85VAC min. must be applied to the modules during output loading; 2. A heat sink must always be used with the modules during output loading.

Wire Gage & Distance to Load

If the resistance of the wire used to connect a module to system components is too high, excessive voltage drop will result between the module and system components, degrading overall system performance such as poor load regulation and transient response. It is important to keep the physical distance between the module and its loading electronic systems as short as possible. Also, the selection of wires and connectors for the input and output connection should be such that the DC resistance of the wires and connectors is minimum. The size of the wire should be selected according to the maximum current that it has to handle with a reasonable margin.

Note: Obviously, any poor connections made to the power distribution bus may present a problem. Terminal strips, spade lugs and edge connectors must be free of any corrosion, dust or dirt. If parallel lines or connections are available for routing module output currents, they should be utilized.

1111 Knox Street ■ Torrance ■ CA 90502 ■ USA ■ Tel: +1 310 202 8820 ■ sales@martekpower.com

Ripple & Noise

Output ripple and noise (sometimes referred to as PARD or "Periodic and Random Deviations") can be defined as unwanted variations in the output voltage of a module. For the Power factor correction modules, the output noise is seen as a series of pulses with a high frequency content riding ripple which is the second harmonic of the input line frequency and is therefore measured as a peak value (i.e., specified as "peak-to-peak"). When compared to the ripple of second harmonic of the input line frequency, the high frequency and spike portion of the ripple and noise is insignificant.

Martek Power Abbott power supplies are specified and tested in our factory with a 25 MHz or 10 Mhz bandwidth oscilloscope. Measurements taken by a scope set at higher frequencies (i.e. 300 MHz) may produce significantly different results due to noise coupling on to the probe from sources other than the power supply.

Ripple & Noise Measurement Techniques

The length of all measurements leads (especially the ground lead) should be minimized. We recommend measurement as close as possible to the module's output terminal block as possible. This can be accomplished by connecting a short bus wire (generally 0.5 inches or less, making a loop at the end to place in the probe) to the negative and positive outputs on the terminal strip, then place the tip of the probe on the +output and ground ring (or ground band) on the -output for a true ripple measurement. This is displayed in Figure 2.

Ripple & Noise Reduction Techniques

In applications where the output ripple of the module is higher then desired various techniques could be employed to reduce output ripple and noise (PARD). One method is to add additional capacitance in parallel with the output leads of the module. As it was mentioned previously, the main output noise and ripple for the module is the second harmonic of the line frequency. Therefore, the frequency of the main ripple is very low, particularly when the input line frequency is 50Hz or 60Hz. It would take a substantial amount of additional capacitance to reduce a noticeable output ripple. **Be aware that excessive additional output capacitance may cause module oscillations or internal damage.** The additional external capacitance added to the module's output shall be limited to 1000µF maximum for PFC1000,750µF maximum for PF500 and additional 255µF for PFC500.

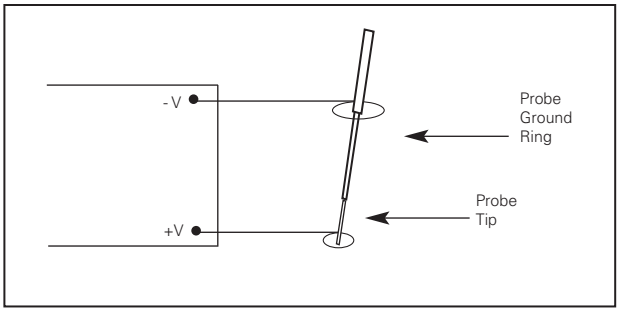

Figure 2.

Series Operation

The PF or PFC series are not designed for any kind of series operation. Connecting the module for series operation, either series the input or series the output, will create hazardous operating conditions and may cause severe damage to the module.

Power Good Signal

AC Power Good signal (AC OK)

As it has been mentioned previously, the AC Power Good signal is provided by an optically coupled open collector circuit that indicates whether the AC input voltage level is present or not. When the input voltage is above 80±4V, the optically coupled output transistor is off. When the input voltage is below 80±4V, the optically coupled output transistor is on. The emitter of this transistor and the emitter of the DC Power Good signal's output transistor are tied together to form a common ground. This ground could be connected to any ground point that the user wants without creating any hazardous high potential conditions. Since it is an open collector output, the user needs to supply the pull up resistor and the TTL supply voltage. With the user supplied pull up resistor and supply voltage, the TTL logic for this output is that Logic high means AC input is present. The current sinking capability for this open collector output is 0.75mA maximum for maintaining a logic zero at 0.5V or less output voltage. Thus, the value for a 5V TTL pull up resistor should be 6.2k Ohm or larger to ensure that logic zero is less than 0.5V under any operating temperature within the range of -40°C to +100°C. Refer to Product features on page 17 for more details.

1111 Knox Street ■ Torrance ■ CA 90502 ■ USA ■ Tel: +1 310 202 8820 ■ sales@martekpower.com

DC Power Good/Built-in-test signal (DC OK)

As it has been mentioned previously, a DC Power Good signal is provided to allow for the monitoring of the output voltage. Same as the AC Power Good signal's output, the output stage of this signal is an optically coupled open collector. The optically coupled transistor is off when the output voltage is within the range of 350±5V and 410±5V. The optically coupled transistor is on when the output voltage is below the 180±10V or higher than 410±5V. As mentioned in the AC Power Good signal section, the emitter of this transistor and the emitter of the AC Power Good signal's output transistor are tied together to form a common ground. This ground could be connected to any ground point the user wants without creating any hazardous high potential conditions. Since it is an open collector output, the user needs to supply the pull up resistor and the TTL supply voltage. With the user supplied pull up resistor and supply voltage, the TTL logic for this output is that Logic high means DC output is within the range of 350±5V and 410±5V. The current sinking capability for this open collector output is 0.75mA maximum for maintaining a logic zero at 0.5V or less output voltage. Thus, the value for a 5V TTL pull up resistor should be 6.2k Ohm or larger to ensure that logic zero is less than 0.5V under any operating temperature within the range of -40°C to +100°C. Refer to Product features on page 17 for more details. This signal can be used to turn on/ off a down-stream DC-DC converter as shown.

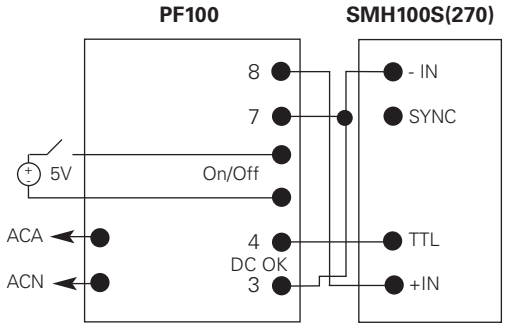

Figure 3a.

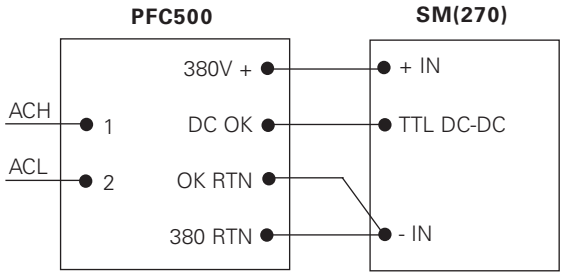

Figure 3b.

Output Voltage other than 380V

For particular application that requires different output voltage, it is possible to have the DC output voltage set to a different value other than the normal 380V. Please consult factory for a particular application and modification.

Electro-Magnetic Interference (EMI) Filter PFF500 & PFF1000

For applications which require meeting MIL-STD-461 EMI (Electromagnetic Interference) requirements PFF500 and PFF1000, passive AC input EMI filters can be used at the input of PF500/PFC500 (see Figure 4) and PFC1000 respectively. MIL-STD-461 CE01 and CE101 are met without the use of EMI filters. Test reports characterizing both filter and power factor correction modules for conducted, radiated and susceptibility emissions will become available soon. All test reports are certified by an independent testing laboratory.

The EMI filter is designed so that its presence has minimal side effects on power factor and distortion levels.

A minimum amount of line to neutral capacitance of 3µF is used inside the filter so that the inrush current caused by the EMI filter is minimized. The inrush circuit in the PFC family of converters is not designed to control the inrush current due to the presence of the EMI filter. Source impedance will be the limiting factor in charging up the 3µF capacitance of the EMI filter.

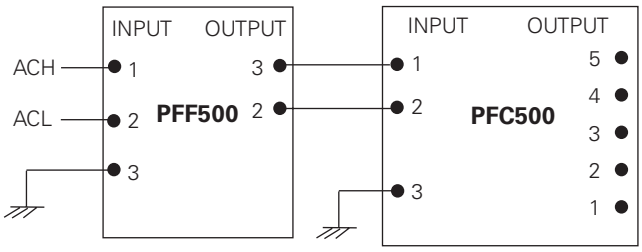

Figure 4.

1111 Knox Street ■ Torrance ■ CA 90502 ■ USA ■ Tel: +1 310 202 8820 ■ sales@martekpower.com

BLOCK DIAGRAM - PF500 & PFC500

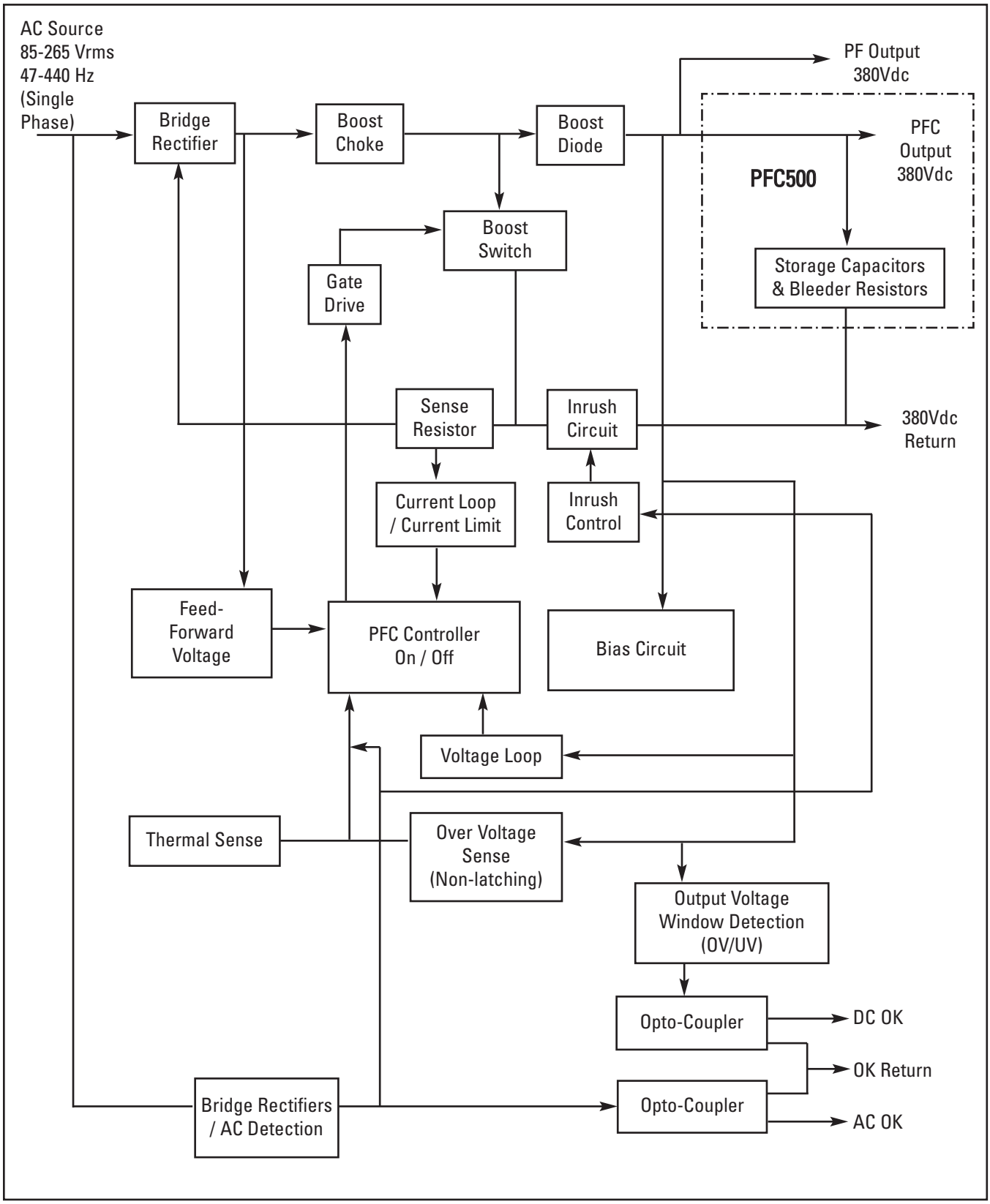

1111 Knox Street ■ Torrance ■ CA 90502 ■ USA ■ Tel: +1 310 202 8820 ■ sales@martekpower.com

BLOCK DIAGRAM - PFF500

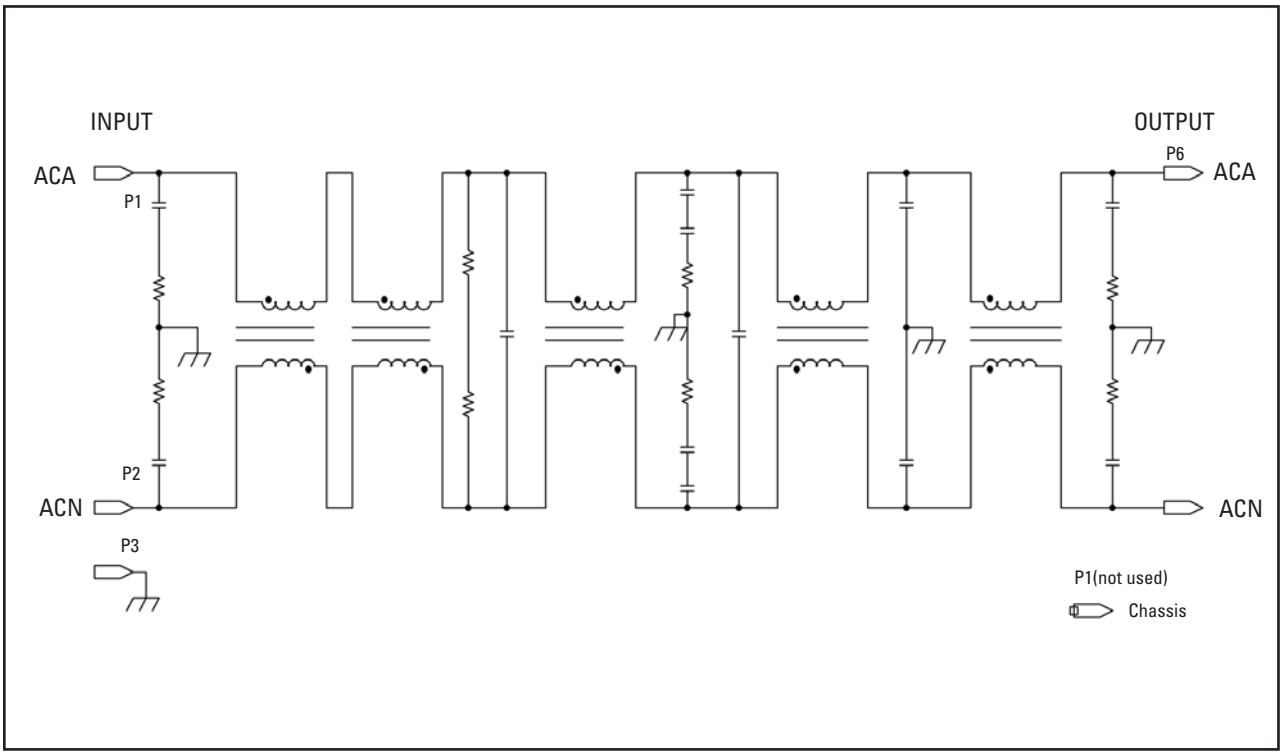

BLOCK DIAGRAM - PFC1000

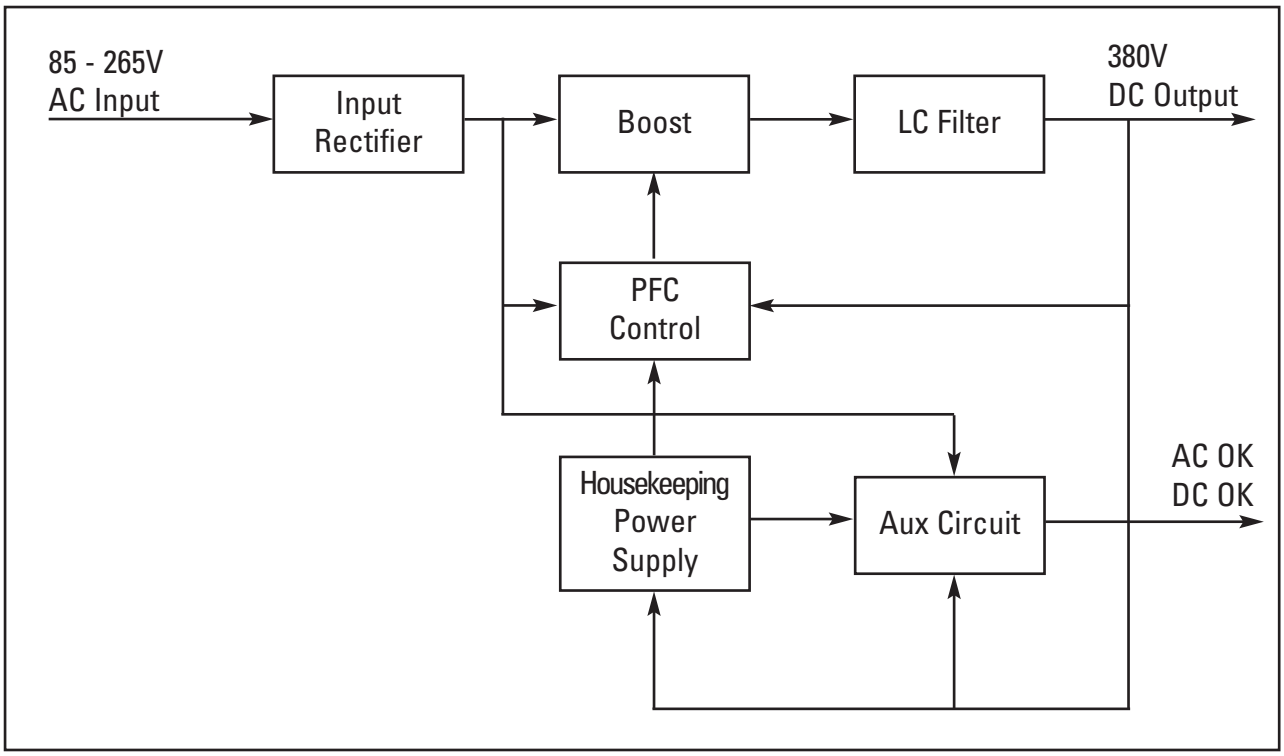

1111 Knox Street ■ Torrance ■ CA 90502 ■ USA ■ Tel: +1 310 202 8820 ■ sales@martekpower.com

Warranty & Repair

Martek Power Abbott's converters and power supplies are built to exacting standards to assure customer satisfaction. Should you ever experience a problem with one of our products please contact your local sales representative to assist in a solution. The terms of the warranty and the length of warranty period* will vary between product lines. Please consult your local sales representative for terms and length of the warranty for any specific model or purchase.

The Company warrants that all of its Products will be free from defects in material and workmanship for twelve months. The Company shall, at its option, and as the Customer's and user's role and exclusive remedy, issue a credit in the amount of the then-applicable price of such Product, or repair or replace any such Product which is defective under the terms of the foregoing warranty, free of charge.

ALL OTHER EXPRESS, STATUTORY AND IMPLIED WARRANTIES, INCLUDING ALL IMPLIED WARRANTIES OF MERCHANTABILITY OR FITNESS FOR A PARTICULAR PURPOSE, ARE HEREBY DISCLAIMED. IN NO EVENT WILL THE COMPANY BE LIABLE FOR ANY INDIRECT, PUNITIVE, SPECIAL, INCIDENTAL OR CONSEQUENTIAL DAMAGE IN CONNECTION WITH OR RELATED TO THE SALE OF PRODUCTS.

The information and specifications contained in this catalogue are, to the best of our knowledge, correct at time of publication. However, Martek Power Abbott accepts no responsibility for consequences arising from errors or inaccuracies. No liability, implied or otherwise, is accepted for costs or inconvenience incurred as a result of these changes. Neither does the manufacturer undertake any commitment to guarantee continuity of supply in the event of product obsolescence. In addition, Martek Power Abbott reserves the right to change its standard product range of the specification of any model subsequently without prior notice. No liability as a result of any of the above occurrences can be accepted.

Warranty Period*

I. A, B, C, M, W and LV Series: One (1) year warranty.

II. CB, HM, MW, NB, NH, NL, NW, PFC and SM Series: Three (3) years warranty.

***Repairs**

I. A, B, C, M, W and LV Series: Martek Power Abbott will repair products covered by our warranty. To return products a Return Material Authorization Number is required. Products beyond the warranty will be repaired only after the customer has authorized quoted repair charges. Any Martek Power Abbott product over seven(7) years old from the date of original shipment will not be serviced or repaired.

II. CB, HM, MW, NB, NH, NL, NW, PFC and SM Series: During warranty period, Martek Power Abbott will repair or replace (at Martek Power Abbott's discretion) products found to be defective. Martek Power Abbott will not repair products that are out of warranty.

***After Repair Warranty**

I. A, B, C, M, W and LV Series: Upon completion of repair, the products will be under warranty for a period of one year. Regardless of the date of repair, no product will be serviced or warranted beyond seven (7) years from the date of original shipment.

II. CB, HM, MW, NB, NH, NL, NW, PFC and SM Series: Upon completion of repair, the products will be under warranty for a period of one year. Regardless of the date of repair, no product from the CB, HM, MW, NB, NH, NL, NW, PFC and SM Series will be serviced or warranted beyond three (3) years from the date of original shipment.

Return Material Authorization Numbers

All returning goods must be accompanied by a Return Material Authorization (RMA) number. The RMA number must be clearly marked on the outside of the shipping carton. To receive and RMA number contact Martek Power Abbott at (310) 202-8820, extension 4276. Please be prepared with the correct model and serial number of the product to be returned. For out of warranty products, a company purchase order will be required for processing.

1111 Knox Street ■ Torrance ■ CA 90502 ■ USA ■ Tel: +1 310 202 8820 ■ sales@martekpower.com

Evaluation Charges
All out of warranty products returned to Martek Power Abbott are subject to a $50.00 evaluation charge. If the returned product is found to be in need of repair, and these repairs are authorized, the $50.00 evaluation fee will be waived.

Repair Charges
Repair charges for all models are quoted per Martek Power Abbott published repair price list RPL97-07D. The repair charges do not include any additional processing or testing fees (i.e. ESS testing).

Shipping Instructions
All returning goods must have a RMA number marked on the carton. The number should be marked on a minimum of 2 sides of the carton, 3 inches (76mm) high, 6 inches (152mm) long. All goods must be shipped prepaid. Martek Power Abbott reserves the right to refuse all shipments received without a RMA number.

1111 Knox Street ■ Torrance ■ CA 90502 ■ USA ■ Tel: +1 310 202 8820 ■ sales@martekpower.com