Panasonic

New Product Introduction

NEW! PAN1721 SERIES *BLUETOOTH*® LOW ENERGY

Ultra Low Power, *Bluetooth* Low Energy Module

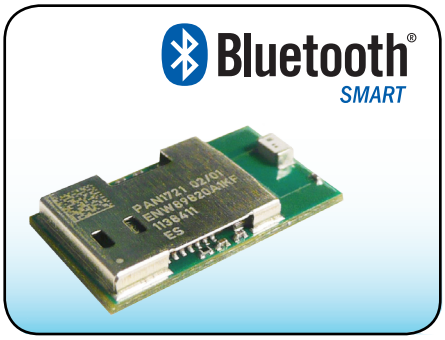

Introducing the **PAN1721**, a complete power optimized *Bluetooth* v4.0 Low Energy (BLE) solution, this module includes an embedded processor, antenna and BLE stack. The **PAN1721** is engineered for **ultra** low power consumption applications.

The **PAN1721** is a cost-effective, ultra low-power, system-on-chip (SoC) for *Bluetooth* Low Energy applications. The module includes an eight channel, twelve bit analog-to-digital converter, 19 GPIOs plus battery and temperature sensors. A single device for both BLE master or slave nodes. The **PAN1721** combines an excellent RF transceiver with a high performance low power 8051 microcontroller, in-system programmable flash memory, 8-KB RAM, and many other powerful supporting features and peripherals.

The **PAN1721** is an ideal choce for applications where battery life is a critical application requirement, using only 500 nA in sleep mode. Short transition times between operating modes–3 uS Wake-Up – and power efficient hardware further reduce current consumption.

Panasonic offers *Bluetooth* Low Energy protocol stacks and applications from Texas Instruments and *Blue*Radios™. The BlueRadios stack enables rapid and low cost development using an AT command set without the need for a compiler. Additional advantages include UART programming, over-the-air-updates, easy integration "C" library framework, serial streaming of data, and smart phone libraries and applications.

Product Performance:

- *Bluetooth* 4.0 Compliant and *Bluetooth* Low Energy
- Dimensions: 14.5x 8.2 x 3 mm
- Supports User Developed Applications
- Texas Instruments' Stack or Optional *Blue*Radios Stack
- 256K Flash, 8K RAM
- Supports 1 Mbps Data Rate
- Temperature Range -40°C to +85°C
- Eight Channel 12-Bit ADC
- 19 GPIOs
- Battery Monitor and Temperature Sensor

PAN1721/1711 Part Numbers:

Part Numbers	Description
ENW-89835A1KF	PAN1721, CC2541 *Bluetooth* Low Energy with 8051 Controller, Texas Instruments Stack
ENW-89835A3KF	PAN1721, CC2541 *Bluetooth* Low Energy with 8051 Controller, *Blue*Radios Stack
ENW-89835C1KF	PAN1711, CC2541 *Bluetooth* Low Energy with 8051 Controller, Texas Instruments Stack
ENW-89835C3KF	PAN1711, CC2541 *Bluetooth* Low Energy with 8051 Controller, *Blue*Radios Stack
EVAL_PAN1721	*Bluetooth*, PAN1721, Evaluation Kit, Includes Two PAN1721 USB Development Modules
EVAL_PAN1721BR	*Bluetooth*, PAN1721, Evaluation Kit, Includes Two PAN1721 USB Development Modules, *Blue*Radios FW

Alternative Low Energy Device:

Part Numbers	Description
ENW-89823A2JF	PAN1326, CC2564, *Bluetooth* & *Bluetooth* Low Energy, HCI Module, Antenna

The *Bluetooth*® word mark and logos are registered trademarks owned by Bluetooth SIG, Inc. and any use of such marks by Panasonic Corporation of North America is under license. Other trademarks and trade names are those of their respective owners.

Panasonic ideas for life

Website: www.panasonic.com/industrial/
industrial@us.panasonic.com
1-800-344-2112

Copyright© 2012 Panasonic Corporation of North America.
All Rights Reserved. Specifications are subject to change without notice.
PAN1721NPI, FY12-089-XXX

Panasonic

New Product Introduction

Interfaces:

The PAN1721 Interface supports:

- Two Powerful USARTs with Support for Serveral Serial Protocols
- I2C Interface
- 19 General-Purpose I/O Pins (17x4mA, 2x20mA)
- 12-Bit ADC with Eight Channels and Configurable Resolution

Applications:

- 2.4 GHz *Bluetooth* Low Energy Systems
- Proprietary 2.4 GHz Systems
- Human Interface Devices
- Sports and Leisure Equipment
- Mobile Phone Accessories
- Consumer Electronics
- USB Dongles
- Health Care and Medical

Block Diagram PAN1721/PAN1711:

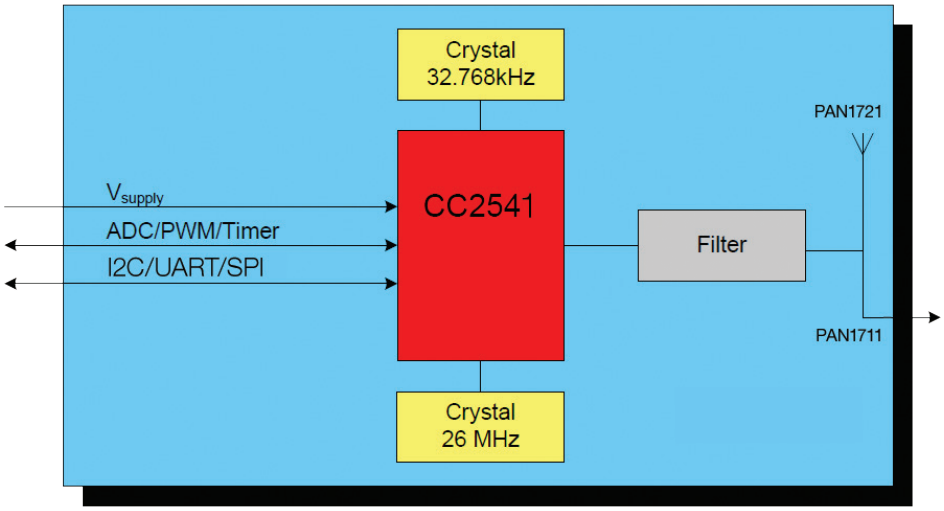

Evaluation Kits:

EVAL_PAN1721

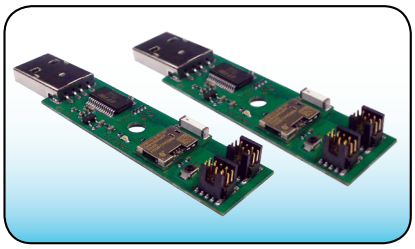

EVAL_PAN1721BR

Technical Specifications for PAN1721:

Parameter	Value	Condition / Notes
Receiver Sensitivity (1% PER)	-96 dBm	@ 500 kpbs / MSK (High-Gain Mode)
Output Power	0 dBm typ.	Maximum Setting
Power Supply	2.0 - 3.6 V	Single Operation Voltage
Sleep Mode	0.5 µA	Power Mode 3 (Lowest)
Transmit Mode	14 mA	@ 0dBm (Peak Current)
Receive Mode	14.7 mA	Standard Mode
Operating Temperature Range	-40°C to +85°C	Industrial Range

The *Bluetooth*® word mark and logos are registered trademarks owned by Bluetooth SIG, Inc. and any use of such marks by Panasonic Corporation of North America is under license. Other trademarks and trade names are those of their respective owners.

Panasonic ideas for life

Website: www.panasonic.com/industrial/
industrial@us.panasonic.com
1-800-344-2112

Copyright© 2012 Panasonic Corporation of North America.
All Rights Reserved. Specifications are subject to change without notice.
PAN1721NPI, FY12-089-XXX