api technologies corp.
Spectrum Control

High Current/High Voltage Resin Sealed Filters

High current filters are ideal for use in high current 5 volt logic buss, but also can be used for ±48 VDC telephone rack buss, high current switch mode power supplies and DC charging systems. High voltage filters find use in high voltage power supplies and applications requiring U.L. Hi-Pot.

Features

- Current ratings up to 100 Amps
- Continuous voltage ratings up to 1250 VDC/240 VAC (400Hz)
- U.L. 1459 recognized and CSA C22.2 approved versions available
- Rugged bolt-in style for easy installation

Installation Notes

for Figure 1 & 2 — see below (Figure 3 see page CF6)

1. Mounting installation torque
   Method A: Mounting in full threaded through-hole
   Maximum torque: 96 in-lbs

   Method B: Mounting w/hardware
   Maximum torque: 84 in-lbs

2. Terminal installation torque
   Maximum torque: 20 in-lbs

   Note: Use two-wrench method to install terminal hardware

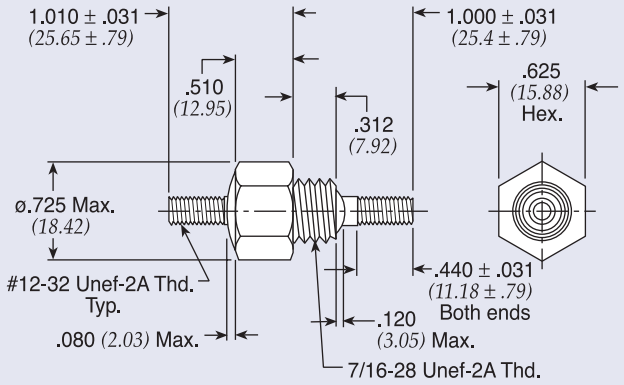

Figure 1

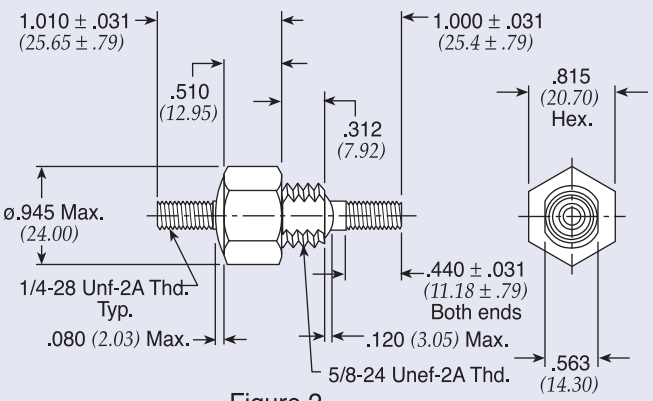

Figure 2

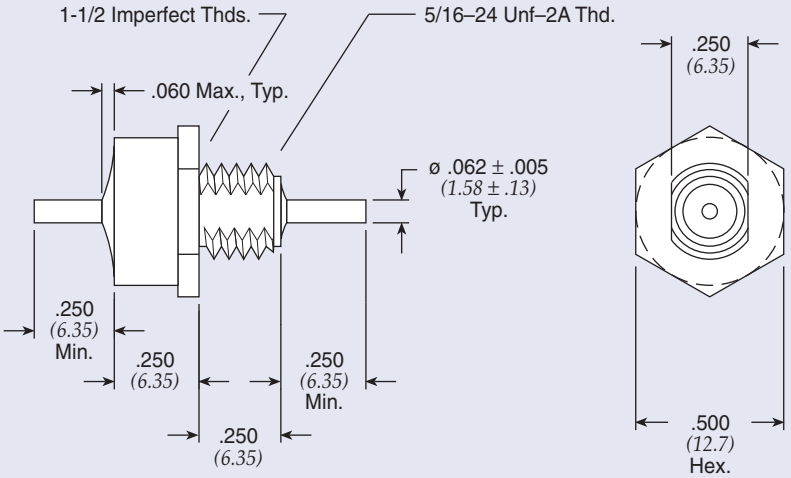

Figure 3

Dimensions in inches *(mm)*

High Current/High Voltage Resin Sealed Filters

High Current High Voltage Feed-through

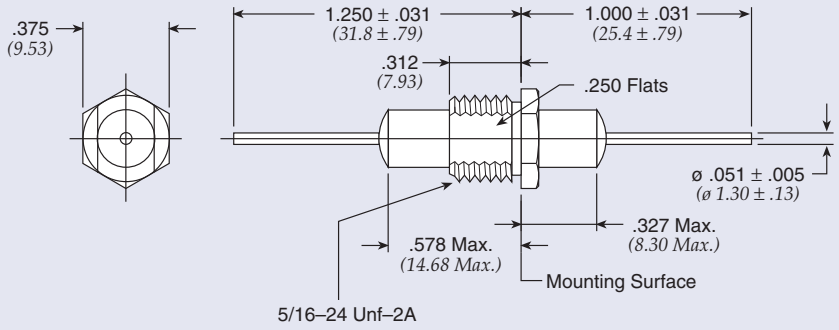

Figure 4

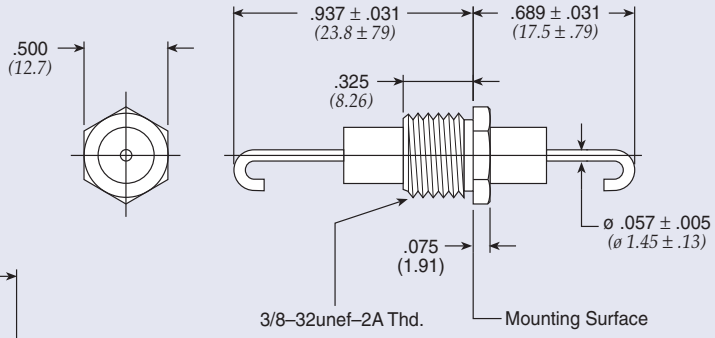

Figure 5

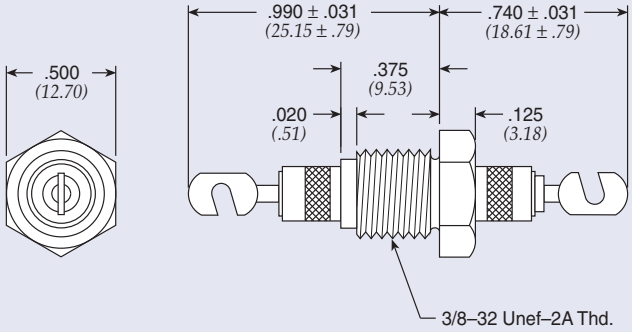

Figure 6

Dimensions in inches *(mm)*

Part Number	Figure	Rated Voltage 125°C DC	Rated Voltage 125°C AC***	I Amp	CKT	Min Cap	Minimum Insertion Loss (dB) 1 MHz	3 MHz	10 MHz	30 MHz	100 MHz	300 MHz	1 GHz	10 GHz
54-848-005*	1	60	—	50	C	0.22 µF	20	30	40	50	50	50	50	50
54-853-001*	2	60	—	50	C	0.22 µF	20	30	40	50	50	50	50	50
54-853-004 €	2	200	140	100	C	0.22 µF	20	30	40	50	50	50	50	50
54-848-008	1	200	140	100	C	0.22 µF	20	30	40	50	50	50	50	50
54-844-001**	3	600	240	25	C	4700 pF ± 20%	—	—	12	20	30	33	50	50
54-844-002**	3	600	240	25	C	0.01 µF ± 20%	3	7	20	25	35	40	57	57
54-763-008	4	750	—	25	C	1000 pF	—	—	—	10	20	28	28	28
54-763-009	4	750	—	25	C	4000 pF	—	—	10	22	32	35	35	40
54-789-003	5	1250	—	25	C	4000 pF	—	—	6	20	30	35	35	35
† **1280-060** €	6	2500	—	25	Pi	1500 pF	—	—	5	15	50	50	50	50

† Also available through API's authorized distributors.
€ Also available through API's authorized European distributors/agents.
* Denotes parts that are UL recognized to UL 60950 and certified to CSA C22.2
** Denotes parts that meet 1500 VAC Dielectric Withstanding Voltage per UL 1283 and CSA C22.2
*** AC Voltage to be 400Hz