TDK

December 2013

Common Mode Filters

For automobile signal line

ACT series

ACT1210 **[1210 inch]* (CAN-BUS, FlexRay)**

* Dimensions Code JIS[EIA]

REMINDERS FOR USING THESE PRODUCTS

Before using these products, be sure to request the delivery specifications.

SAFETY REMINDERS

Please pay sufficient attention to the warnings for safe designing when using these products.

⚠ REMINDERS

- The storage period is less than 12 months. Be sure to follow the storage conditions (Temperature: 5 to 40°C, Humidity: 10 to 75% RH or less).
  If the storage period elapses, the soldering of the terminal electrodes may deteriorate.
- Do not use or store in locations where there are conditions such as gas corrosion (salt, acid, alkali, etc.).
- Before soldering, be sure to preheat components.
  The preheating temperature should be set so that the temperature difference between the solder temperature and chip temperature does not exceed 150°C.
- Soldering corrections after mounting should be within the range of the conditions determined in the specifications.
  If overheated, a short circuit, performance deterioration, or lifespan shortening may occur.
- When embedding a printed circuit board where a chip is mounted to a set, be sure that residual stress is not given to the chip due to the overall distortion of the printed circuit board and partial distortion such as at screw tightening portions.
- Self heating (temperature increase) occurs when the power is turned ON, so the tolerance should be sufficient for the set thermal design.
- Carefully lay out the coil for the circuit board design of the non-magnetic shield type.
  A malfunction may occur due to magnetic interference.
- Use a wrist band to discharge static electricity in your body through the grounding wire.
- Do not expose the products to magnets or magnetic fields.
- Do not use for a purpose outside of the contents regulated in the delivery specifications.
- The products listed on this catalog are intended for use in general electronic equipment (AV equipment, telecommunications equipment, home appliances, amusement equipment, computer equipment, personal equipment, office equipment, measurement equipment, industrial robots) under a normal operation and use condition.
  The products are not designed or warranted to meet the requirements of the applications listed below, whose performance and/or quality require a more stringent level of safety or reliability, or whose failure, malfunction or trouble could cause serious damage to society, person or property.
  If you intend to use the products in the applications listed below or if you have special requirements exceeding the range or conditions set forth in the each catalog, please contact us.

(1) Aerospace/Aviation equipment
(2) Transportation equipment (electric trains, ships, etc.)
(3) Medical equipment
(4) Power-generation control equipment
(5) Atomic energy-related equipment
(6) Seabed equipment
(7) Transportation control equipment
(8) Public information-processing equipment
(9) Military equipment
(10) Electric heating apparatus, burning equipment
(11) Disaster prevention/crime prevention equipment
(12) Safety equipment
(13) Other applications that are not considered general-purpose applications

When designing your equipment even for general-purpose applications, you are kindly requested to take into consideration securing protection circuit/device or providing backup circuits in your equipment.

Common Mode Filters

For automobile signal line

Product compatible with RoHS directive
Compatible with lead-free solders
AEC-Q200

Overview of the ACT Series

FEATURES

- Compact products (3225 size), whose characteristics are equivalent to that of conventional products (ACT45B, ACT45R).
- Common mode filters for CAN-BUS/FlexRay, compatible with an operating temperature range of –55 to +150°C.

APPLICATION

CAN-BUS, FlexRay system.

PART NUMBER CONSTRUCTION

ACT1210 - 110 - 2P - TL □□

Series name	Inductance(typ.) (μH)		Number of lines		Packaging style		Internal code
	110	11	2P	2 lines	TL	ø330mm reel	
	220	22					
	510	51					
	101	100					

OPERATING TEMPERATURE RANGE, PACKAGE QUANTITY, PRODUCT WEIGHT

Type	Temperature range Operating temperature (°C)	Package quantity (pieces/reel)	Individual weight (g)
ACT1210	–40 to +150	6,000	0.07

- RoHS Directive Compliant Product: See the following for more details related to RoHS Directive compliant products. http://www.tdk.co.jp/rohs/

• All specifications are subject to change without notice.

Overview of the ACT Series

RECOMMENDED REFLOW PROFILE

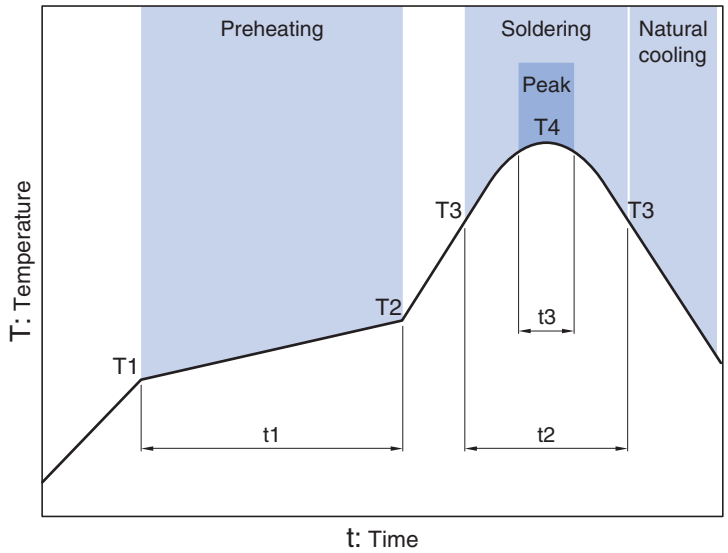

Preheating			Soldering		Peak	
Temp.		Time	Temp.	Time	Temp.	Time
T1	T2	t1	T3	t2	T4	t3
150°C	180°C	60 to 120s	230°C	40s max.	245°C	5s

ACT series

ACT1210 Type

SHAPE & DIMENSIONS

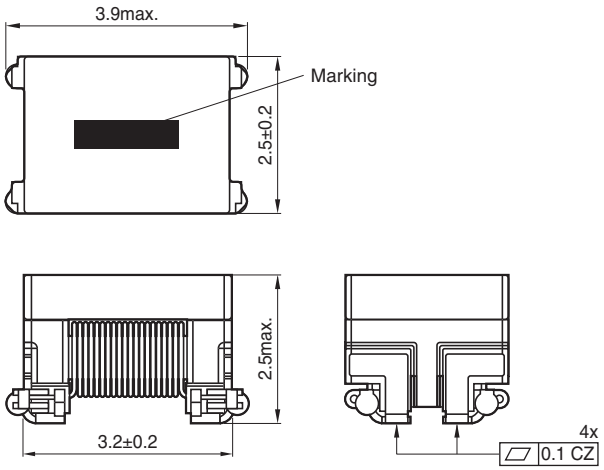

Dimensions in mm

RECOMMENDED LAND PATTERN

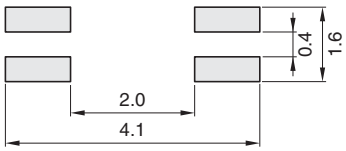

Dimensions in mm

• All specifications are subject to change without notice.

ACT series ACT1210 Type

■ELECTRICAL CHARACTERISTICS

□CHARACTERISTICS SPECIFICATION TABLE

Common mode impedance (Ω) [10MHz 100mV] min.	typ.	Common mode inductance(μH) +50/–30% [100kHz 100mV]	Stray inductance (μH)typ. [100kHz 100mV]	DC resistance (Ω)max.	Rated current (mA)max.	Insulation resistance (MΩ)min.	Rated voltage (V)max.	Part No.
300	550	11	0.05	0.4	300	10	80	ACT1210-110-2P-TL00
500	1100	22	0.06	0.5	250	10	80	ACT1210-220-2P-TL00
1000	2600	51	0.09	0.7	200	10	80	ACT1210-510-2P-TL00
2200	5100	100	0.13	1.5	150	10	80	ACT1210-101-2P-TL00

○ Derating

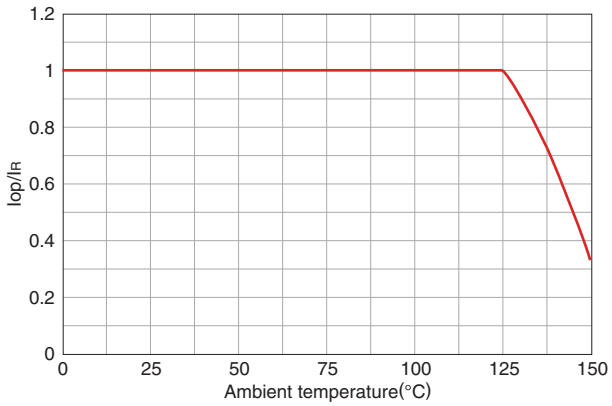

○ Maximum current value for the ambient temperature (mA)

Part No.	Ambient temperature 125°C	140°C	150°C
ACT1210-110-2P-TL00	300	200	100
ACT1210-220-2P-TL00	250	166	83
ACT1210-510-2P-TL00	200	133	66
ACT1210-101-2P-TL00	150	100	50

○ Measurement equipment

Measurement item	Product No.	Manufacturer
Common mode impedance	4991A	Agilent Technologies
Common mode inductance	4294A	Agilent Technologies
DC resistance	4338A	Agilent Technologies
Insulation resistance	4339A	Agilent Technologies

＊ Equivalent measurement equipment may be used.

• All specifications are subject to change without notice.

ACT series ACT1210 Type

■ELECTRICAL CHARACTERISTICS

□IMPEDANCE VS. FREQUENCY CHARACTERISTICS

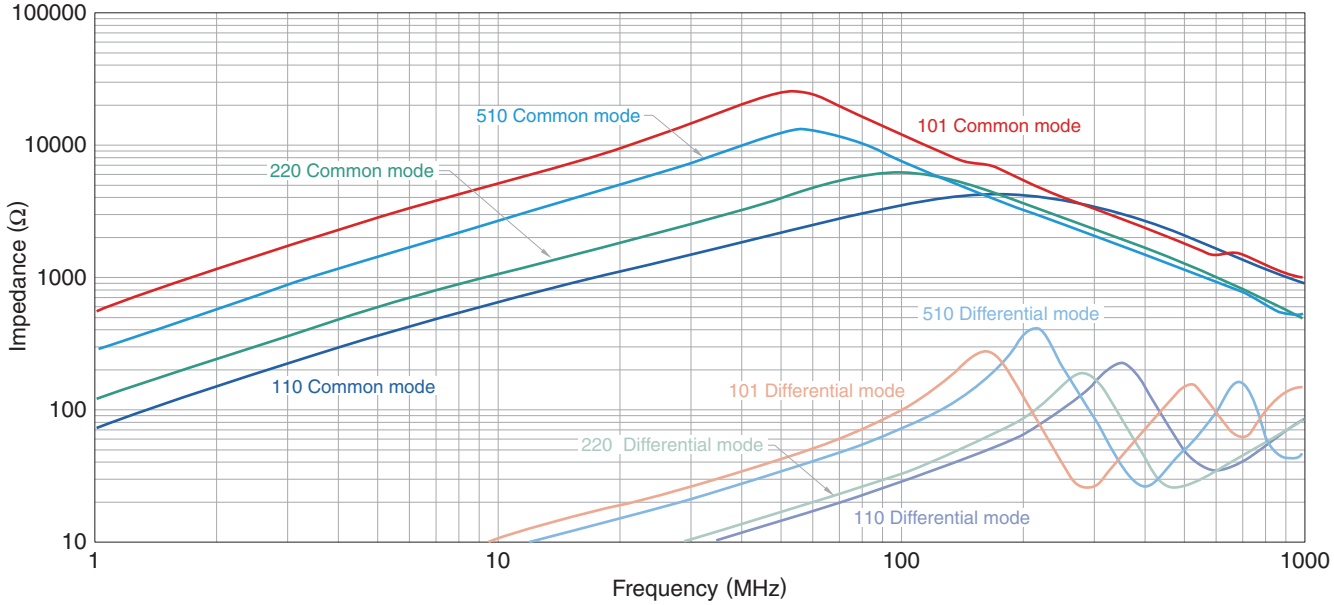

○ Measurement equipment

Product No.	Manufacturer
4991A	Agilent Technologies

＊ Equivalent measurement equipment may be used.

ACT series

Packaging style

REEL DIMENSIONS

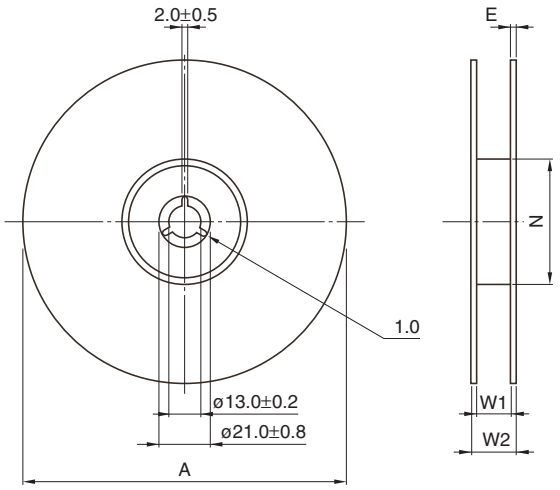

Type	A	W1	W2	N	E
ACT1210	ø330±2	13.5±0.5	17.5±1	100±1	2 typ.

Dimensions in mm

TAPE DIMENSIONS

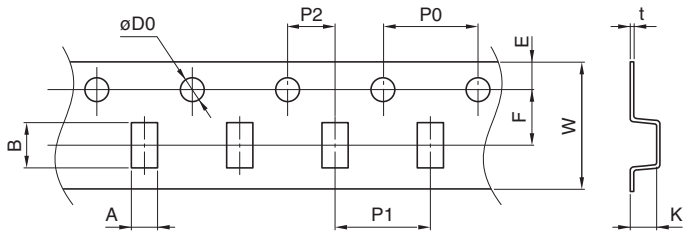

Dimensions in mm

Type	A	B	øD0	E	F	P0	P1	P2	W	K	t
ACT1210	2.85±0.1	4.2±0.1	1.5+0.1/–0	1.75±0.1	5.5±0.05	4±0.1	4±0.1	2±0.05	12+0.3/–0.1	2.7±0.1	0.35±0.1

• All specifications are subject to change without notice.