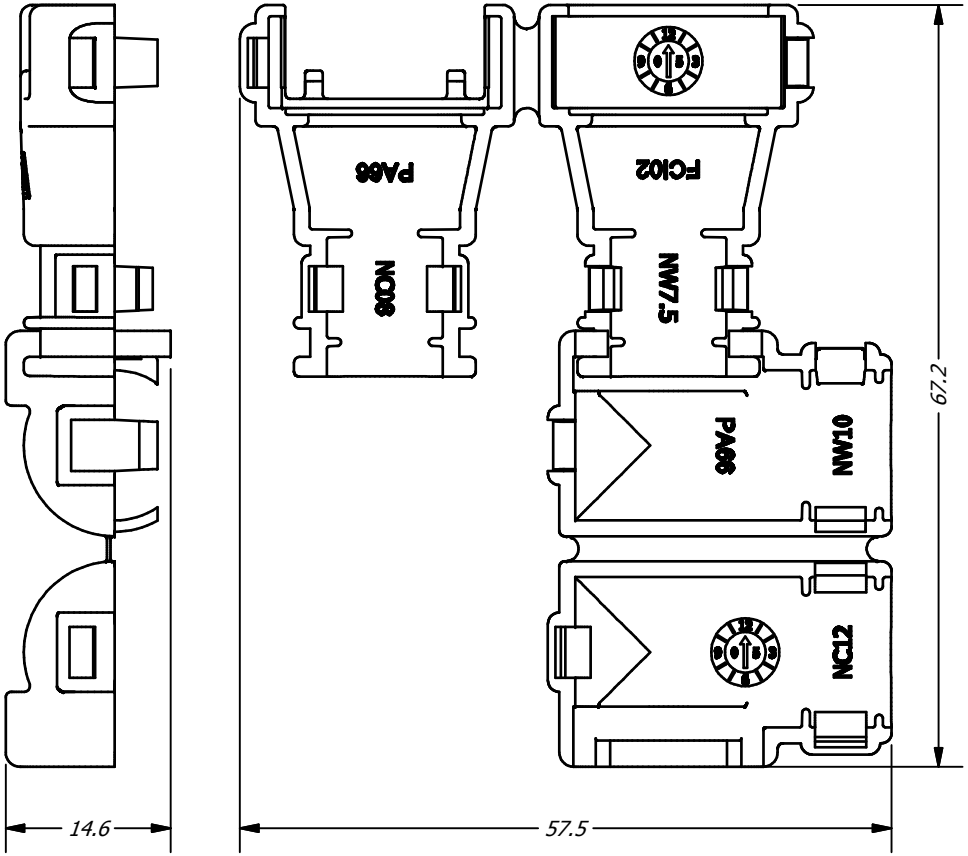

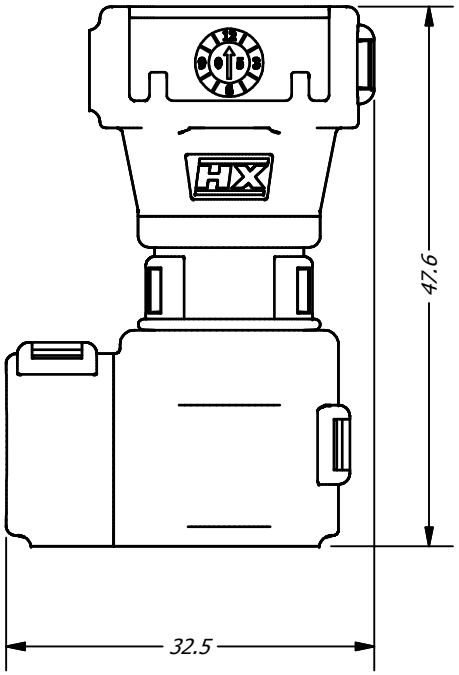

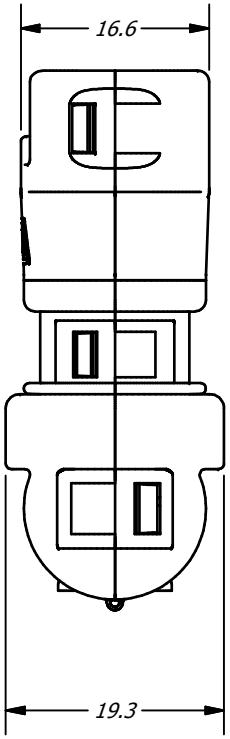

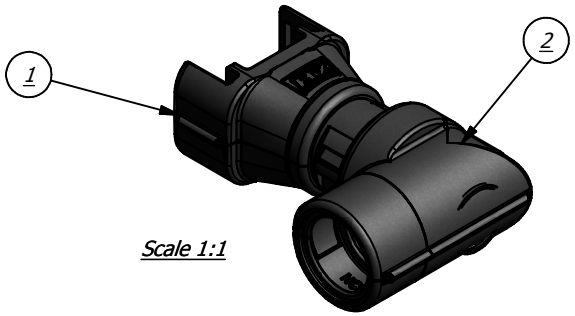

Scale 1:1

Parts List		
ITEM	QTY	PART NUMBER
1	1	CI08-FCI02
2	1	CI12-90

Harnessflex

BIRMINGHAM ENGLAND

A4

THIRD ANGLE PROJECTION

MATERIAL:	Polyamide 6,6
FINISH:	Spark to Ra 2.24µm
GENERAL TOLERANCE:	±0.2
UNSPECIFIED RADII:	0.0 - 0.5

ALL DIMENSIONS IN MM - IF IN DOUBT ASK DO NOT SCALE FROM DRAWING

DRAWN BY:	J.Warren
DATE:	13/03/2006

TITLE: CI12-90-FCI02

SCALE: 3:2

DRAWING NO. 4553

ISSUE 1

NO	MODIFICATIONS	DATE	INITLS

THIS DRAWING/DOCUMENT IS COPYRIGHT AND THE PROPERTY OF HARNESSFLEXFLEX LIMITED. IT MUST NOT BE COPIED (IN WHOLE OR PART) USED FOR MANUFACTURE OR OTHERWISE DISCLOSED WITHOUT PRIOR WRITTEN CONSENT OF THE COMPANY