Pulse Ceramics Basics:

Planar Inverted F Antennas (PIFA's)

Confidential

Pulse Electronics

Topics

- Detailed theory of operation
- Antenna tuning process
- PCB layout considerations
- Integrating other components, speakers, microphones
- The relationship between an LCD panel and the antenna

Pulse Confidential for Customer

All material is Company Confidential.

Detailed theory of operation W3008/W3008C, W3010, W3012

- W3008/W3008C, W3010, and W3012 parts are electrically identical (numbers not inclusive of all PIFAs)
  - Only difference between part numbers is the fundamental operational frequency
  - These ceramics are called “Ground Clearance / GC” designs

- Pulse does offer “On Ground /OG” designs for some frequencies.
  - Primary differences between GC and OG ceramics is that OG antennas are physically larger to increase radiation efficiency.

Pulse Confidential for Customer

All material is Company Confidential.

Definitions:
“Ground Clearance” (GC)
“On Ground” (OG)

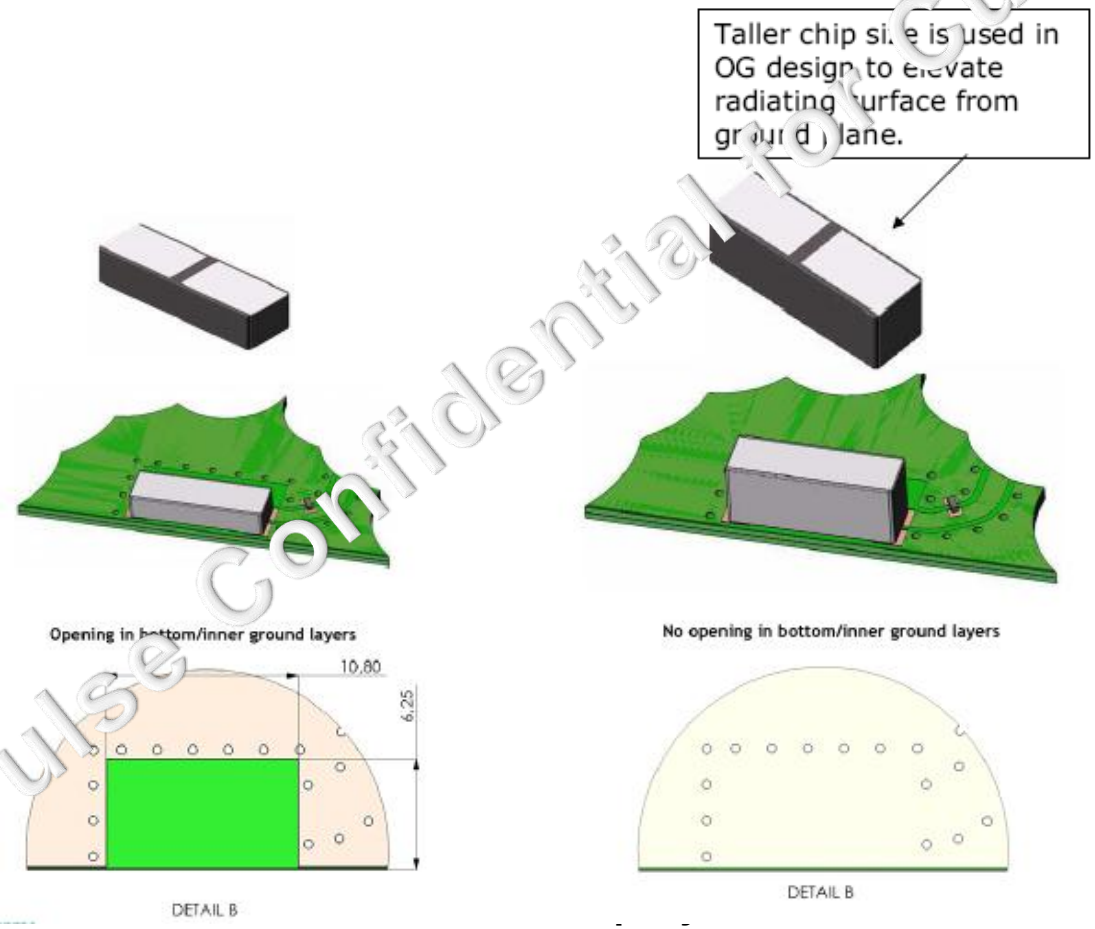

Pulse Confidential for Customer

Pulse Electronics

Loaded PIFA Structure

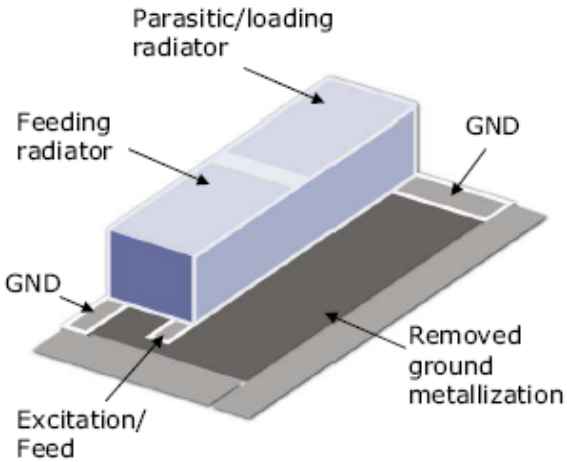

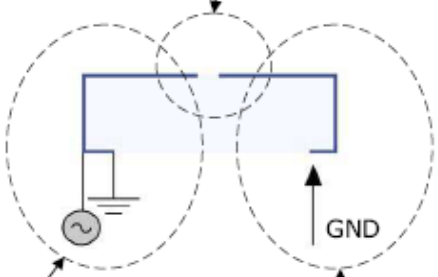

Slot between the two elements creates capaciteve coupling.

First element forms a PIFA type radiator having Feed and Ground contacts

Second element is electrically connected to first through a capacitive coupling.

Second elements tunes resonance frequency downwards enabling use of physically small antenna element.

Stucrure is called **"Loaded PIFA"** due to frequency tuning effect of second element.

All material is Company Confidential.

Pulse Electronics

Function of Ground Clearance area / layout

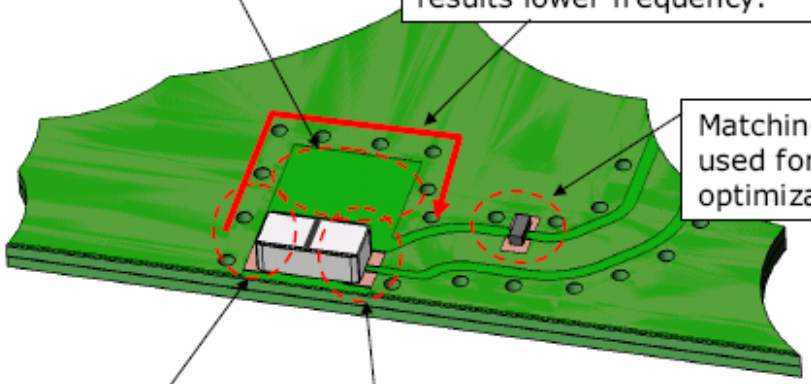

All material is Company Confidential.

Pulse Electronics

Why three pads on board and two on antenna?

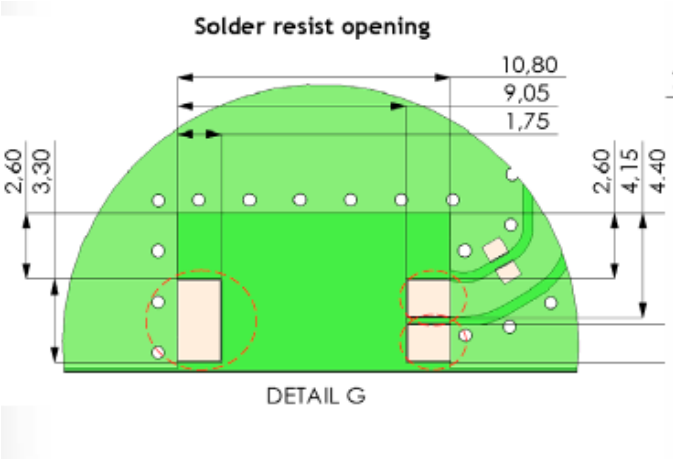

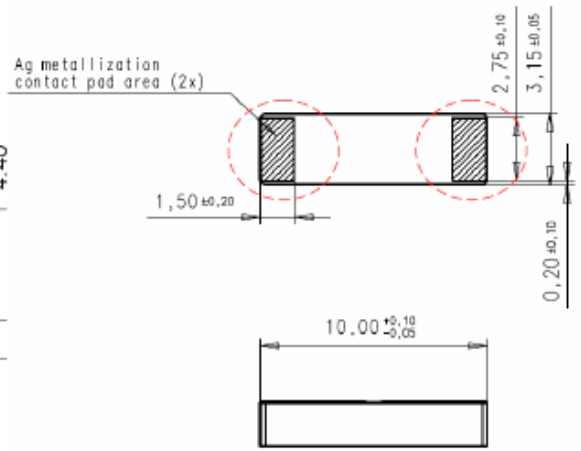

- Basic antenna is PIFA type; Feed and GND are needed for first electrode
- Antenna pad short circuits the two pads on board
- Board pads are normally kept separate to make impedance matching more stable and straight forward

All material is Company Confidential.

Pulse Electronics

Surface currents

- Current flows from feeding element to loading element and across GC-area back to feed. Reinforces GC area return path tuning mechanism.

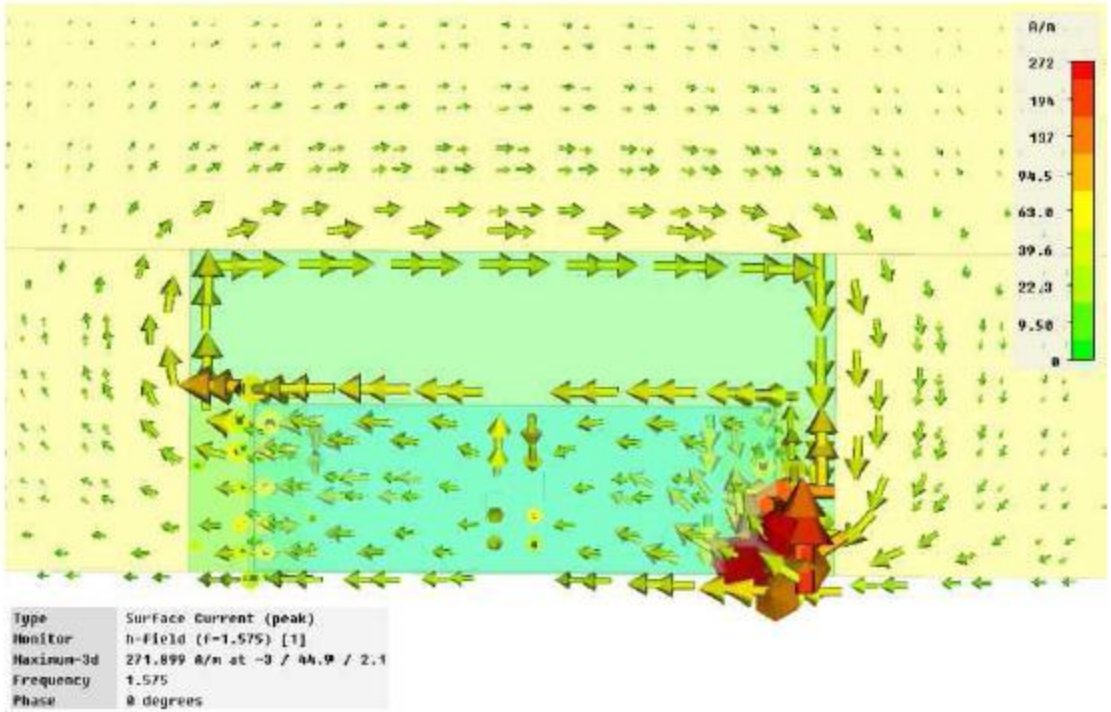

All material is Company Confidential.

Pulse Electronics

PCB effects

- Loaded PIFA antenna is short circuited to PCB ground
- Antenna element electrical length is $\lambda/4$
- PCB has major effect in overall antenna performance figures!
  - PCB electrical length (examples shown later in this presentation)
  - Antenna position on board (examples shown later in this presentation)
  - Grounding points on antenna layout
  - PCB layout and size affects on antenna:
    - Frequency
    - Bandwidth
    - Feed impedance
    - Total radiation performance

All material is Company Confidential.

EM fields on board (PCB)

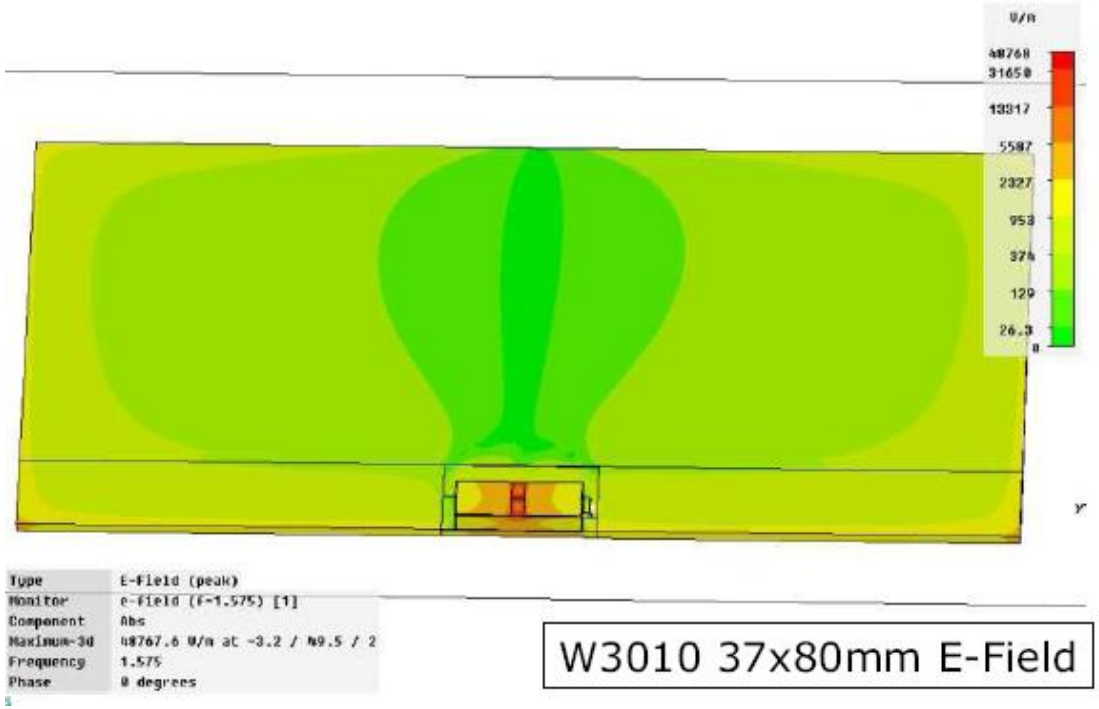

Whole PCB is "hot"

All material is Company Confidential.

Pulse Electronics

EM fields on board (PCB)

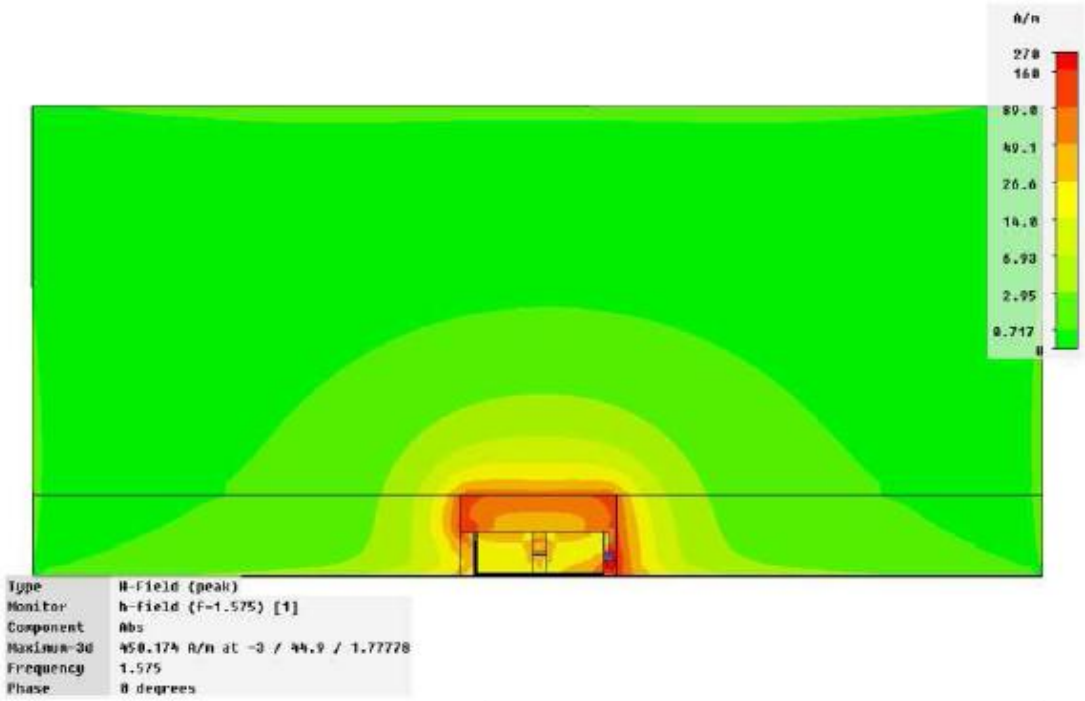

W3010 37x80mm H-Field

All material is Company Confidential.

Pulse Electronics

PCB Effect

- Entire PCBA with antenna element needs to be handled as part of the radiating structure
- Total radiation is combination of ceramic antenna element radiation and PCB radiation
  - This is true for all electrically small short circuited antenna elements
  - Such antenna element performance cannot be determined without referring to some known GP scheme and size

All material is Company Confidential.

PCB Effect

- GP size drives total performance. For example:
  - Optimal minimum GP length for Loaded PIFA (GPS) is about 80-90mm
  - Optimal minimum GP length for Loaded PIFA (WiFi) is about 50-60mm
- Performance depends slightly on board materials (*tand, Er*), shape and layer structure/grounding
- Electrically long boards is usually OK; it enables asymmetric placement of antenna without loss of efficiency
- Electrically short board causes drop in total radiated efficiency due to reduced radiation from board

All material is Company Confidential.

Benefits of “Loaded PIFA”

- Can achieve extremely good efficiency number when properly implemented, 90%
- Creates close to omni-directional 3D radiation pattern
  - Above mentioned features are due to combination of ceramic antenna element and board resonance radiation
- High immunity of frequency detuning due to user tissue (body, hand, head) and surrounding mechanics

All material is Company Confidential.

Challenges in using ”Loaded PIFA”

- Unique antenna type, not commonly known and cannot be treated in implementation as most of other antenna types (Patches, monopoles etc.)
- Antenna elements are connected to ground causing strong relation between antenna performance and PCB features
- Board is part of radiating structure => whole board couples to body tissue close to board
  - This does not cause much detuning in frequency but degrades the total radiation efficiency
  - All electrically small antennas with ground connection suffer from same effect

All material is Company Confidential.

W3009 details

- W3009 is “On Ground” OG –type ceramic
- Having solid ground plane under antenna enables placing other components directly under antenna
- This improves board “real estate”
  - For example display or battery can be placed closer to board edge where antenna is positioned

All material is Company Confidential.

W3009 details continued

- Electrically W3009 is similar to counterpart GC-type W3010
- GC area dimension use in frequency tuning and BW control is not as effective as found with GC designs
- This is due to surface currents which have more direct path to flow along PCB edge
- OG design requires taller antenna to achieve adequate radiation
- Board top surface ground removal is used to keep some level of tunability. It also increases antenna effective height by factor of PCB thickness.

All material is Company Confidential.

W3009 EM -fields

- E-field

Pulse Confidential for Customer

All material is Company Confidential.

Pulse Electronics

W3009 EM -fields

- H-field

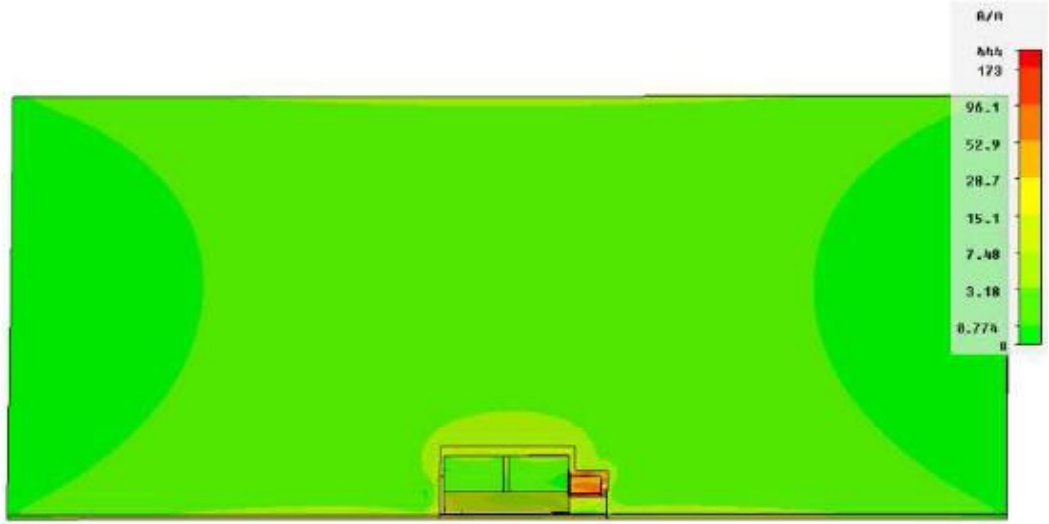

Type	H-Field (peak)
Monitor	h-field (f=1.572) [1]
Component	Abs
Maximum-3d	511.476 A/m at 1.55 / 42.0039 / -0.409143
Frequency	1.572
Phase	0 degrees

All material is Company Confidential.

Pulse Electronics

W3009 Surface currents

- Current pattern/flow is similar to GC ceramics but current density is much smaller around the ground removal area
- This explains why change in top surface GC-area is not as effective as with the standard GC ceramics.

Pulse Confidential for Customer

All material is Company Confidential.

Pulse Electronics

Simulation / Design Tools

- Mechanical Design:
  - Catia, I-DEAS, PRO-E, SolidWorks
- Electrical Design:
  - CST MWS, IE3D, AWR Aplac, AWR MWO, Ensemble, HFSS Ansoft Designer
    - Structural Simulation
    - Tolerance Analysis
    - Material Studies

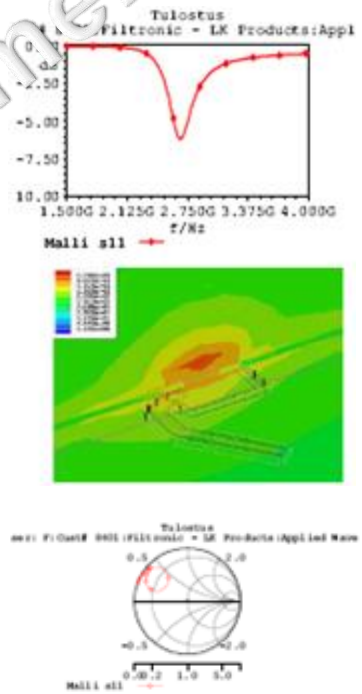

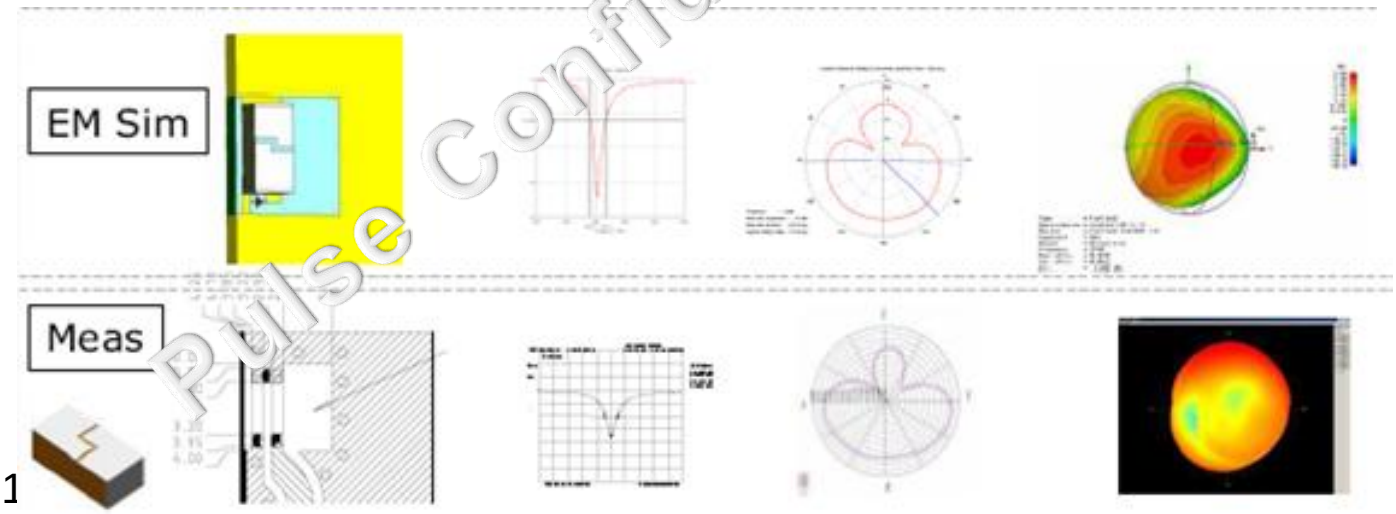

Pulse Confidential for Customer

Pulse Electronics

Example of EM simulation model

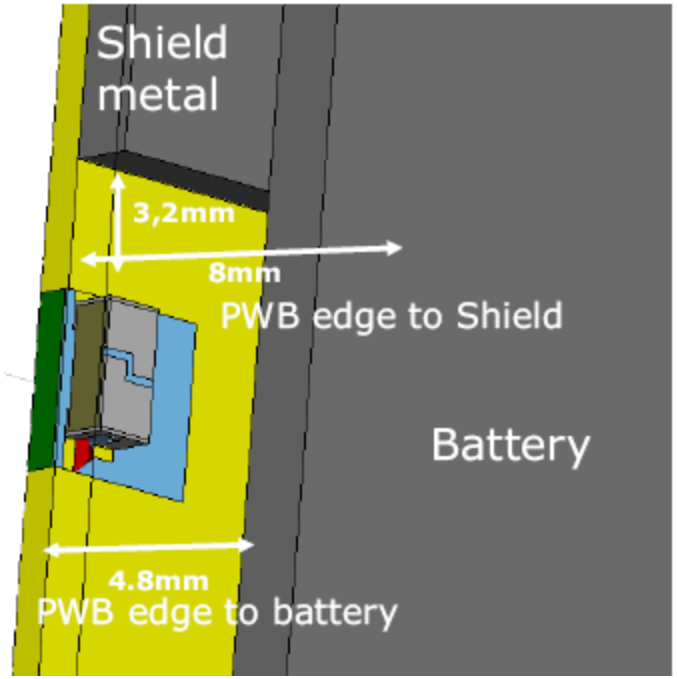

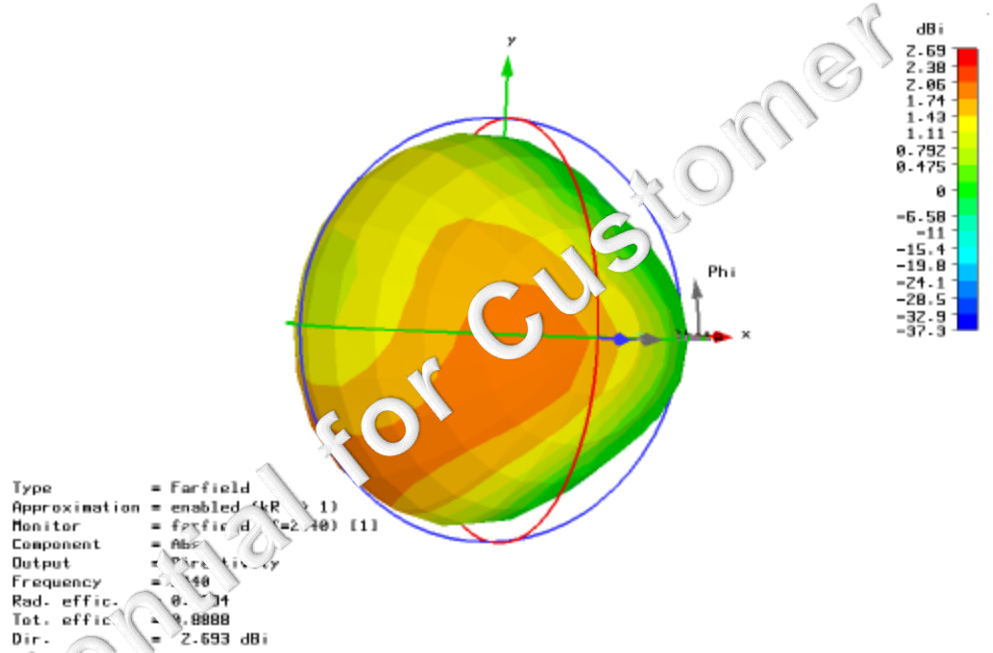

Pulse Confidential for Customer

- W3008 model build using CST MWS

All material is Company Confidential.

Pulse Electronics

W3010 (GPS) Board size effects

- 40...100mm
- Length is important, not board width

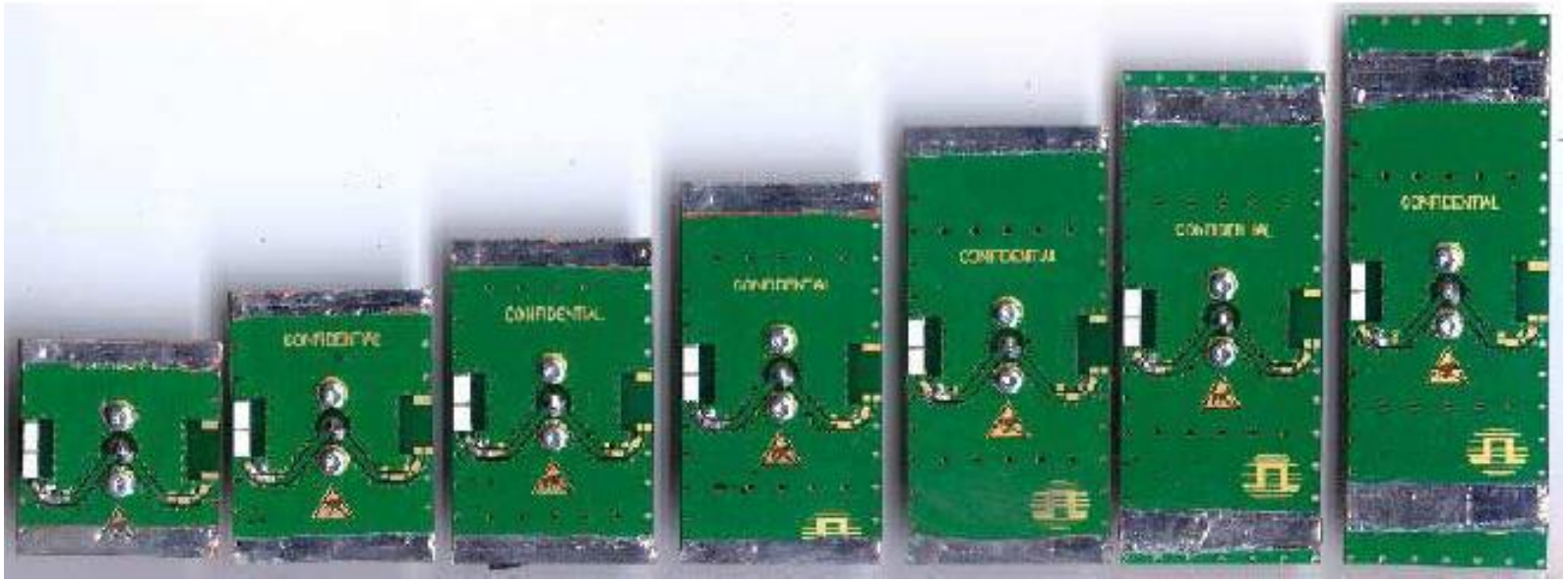

All material is Company Confidential.

Pulse Electronics

W3010 Board size effect

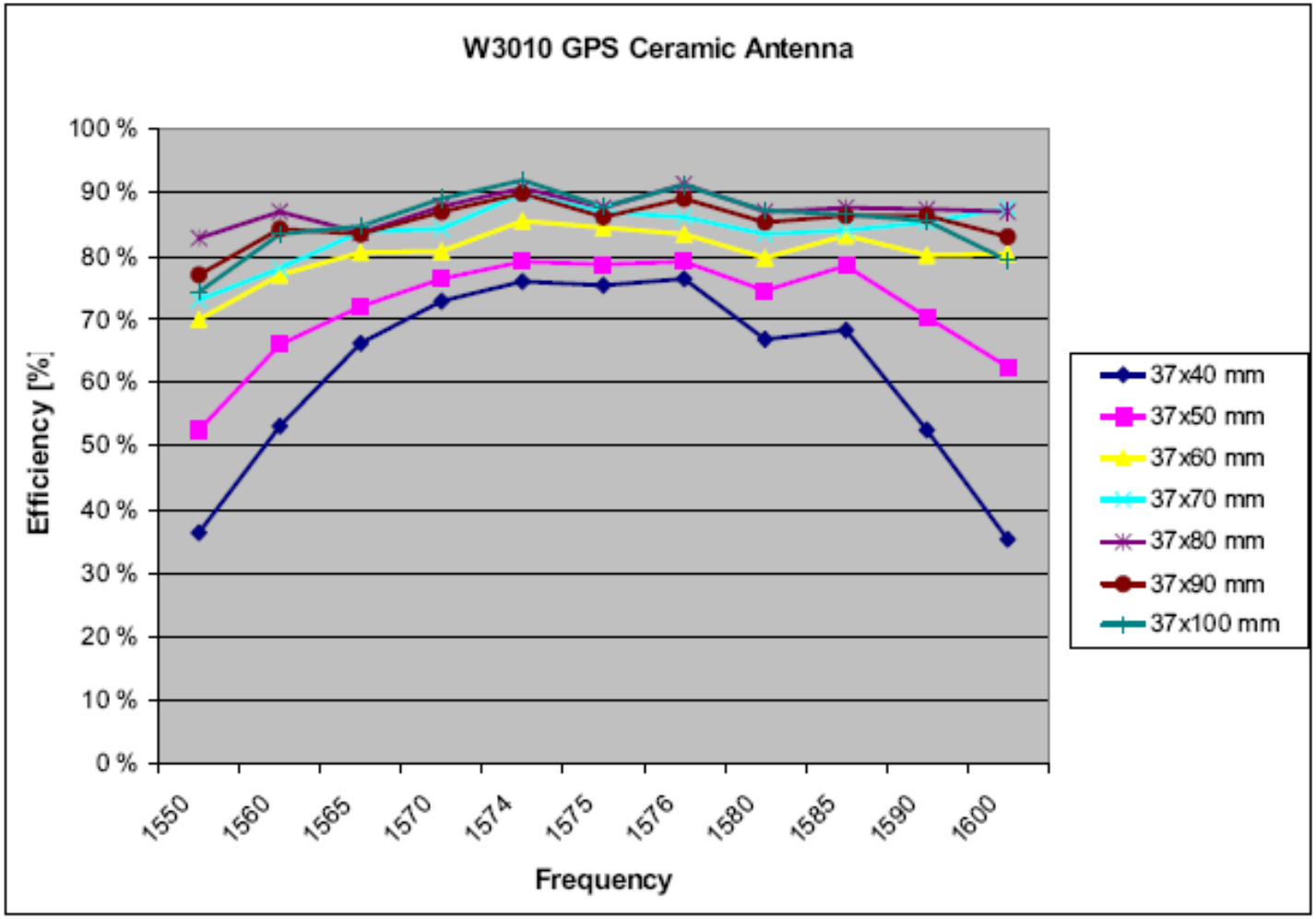

All material is Company Confidential.

Pulse Electronics

W3010 Board size effect

- Note: board electrical length affect also to attainable BW

Board size [mm]	BW -10dB [MHz]	Total Efficiency [%]
37x40	16	75
37x50	28	79
37x60	61	84
37x70	95	87
37x80	124	88
37x90	78	89
37x100	52	88

All material is Company Confidential.

Antenna Placement

- The preferred placement is along the length of the PCBA, however other locations may be considered with an understanding that the performance will be less than described in the associated datasheet.

- To show the relative performance trade-offs, a study was performed to compare both impedance bandwidth changes and efficiencies of the ceramic in 5 different locations with the W3010(GPS) GC Loaded PIFA.

Pulse Confidential for Customer

All material is Company Confidential.

Ref. Antenna Measurement setup and matching

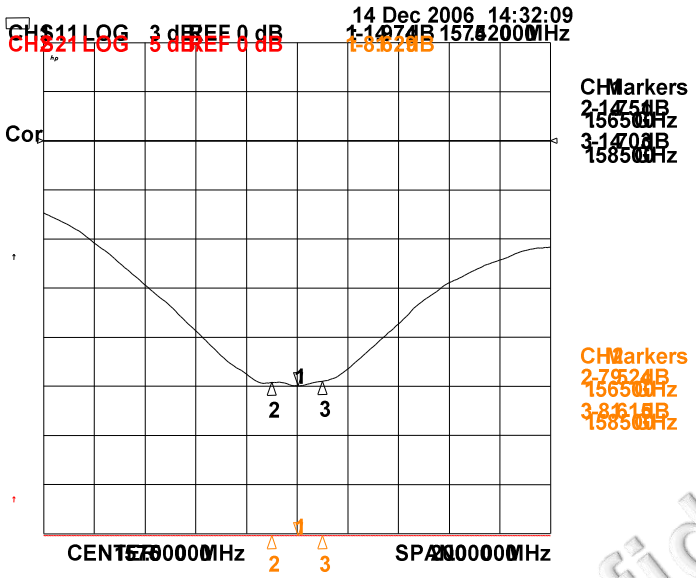

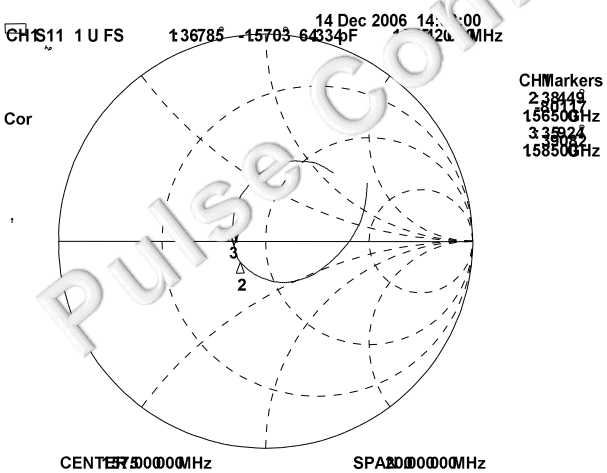

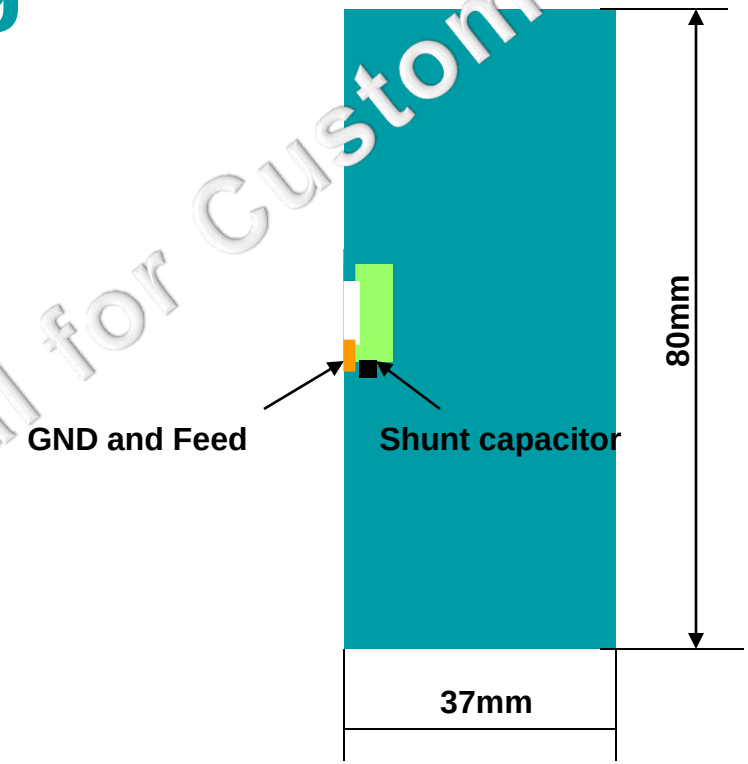

- Ground plane (PWB)
- Ground clearance area
- Ceramic GPS antenna
- Feed Line

Pulse Confidential for Customer

Company Confidential.

Pulse Electronics

CASE 1 Measurement Setup and Matching

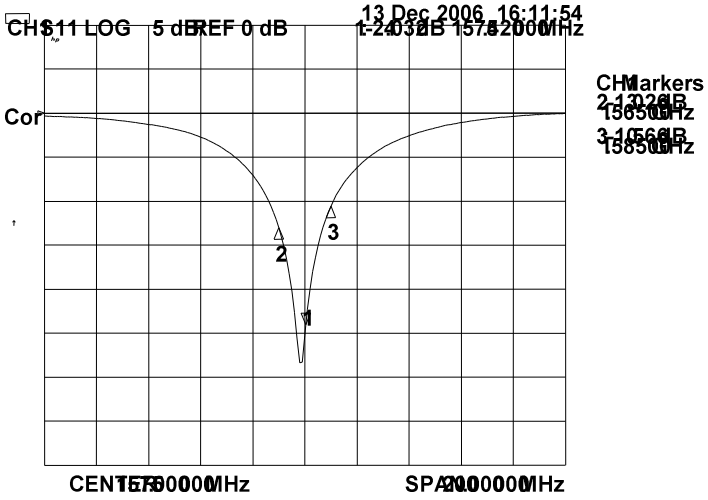

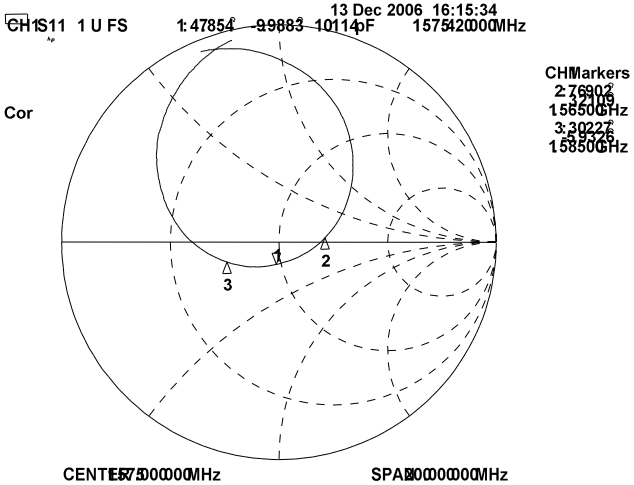

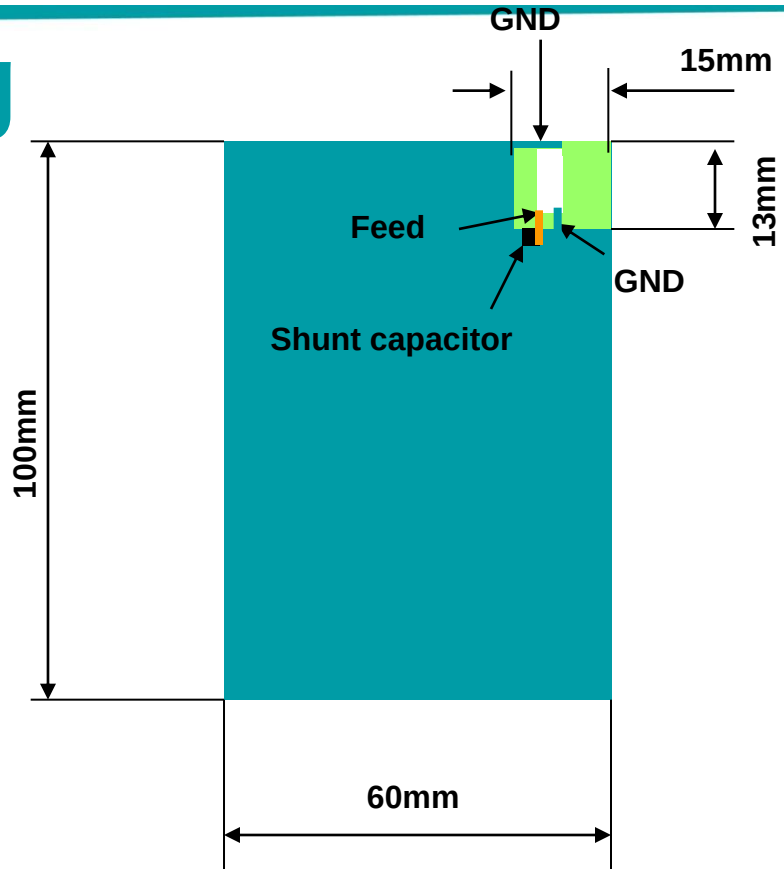

Ground plane (PWB)

Ground clearance area

Ceramic GPS antenna

Feed Line

Company Confidential.

Pulse Electronics

CASE 2 Measurement Setup and Matching - feed left

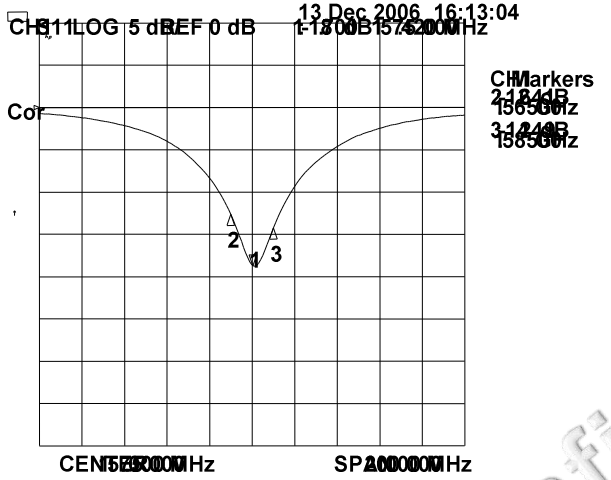

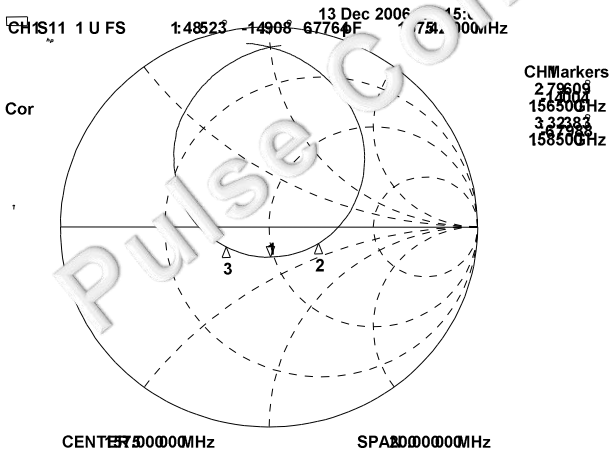

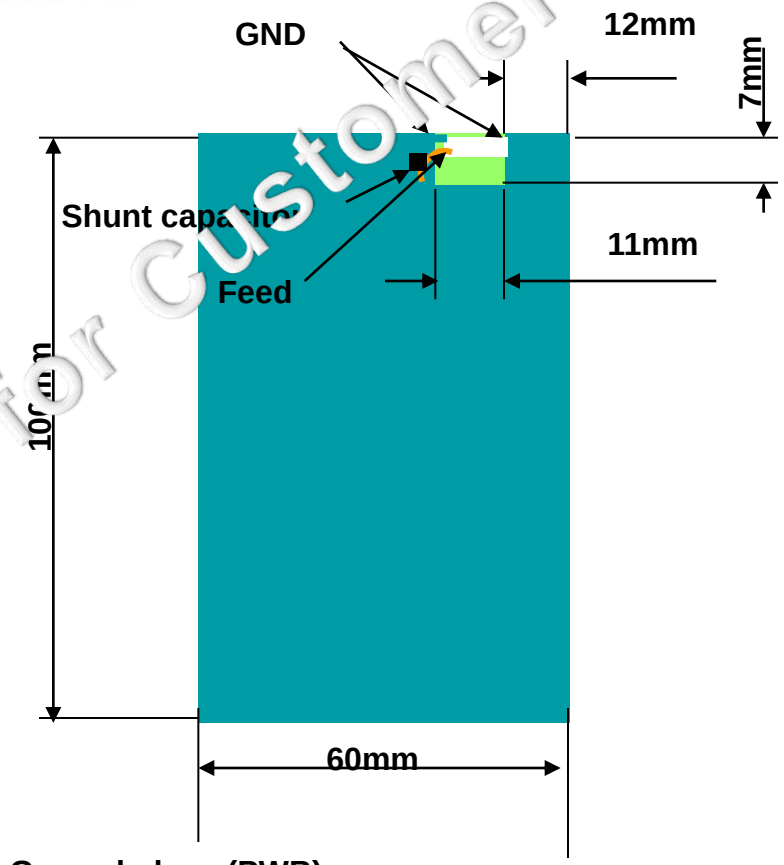

Ground plane (PWB)

Ground clearance area

Ceramic GPS antenna

Feed Line

Pulse Confidential for Customer

; Company Confidential.

Pulse Electronics

CASE 3 Measurement Setup and Matching - feed right

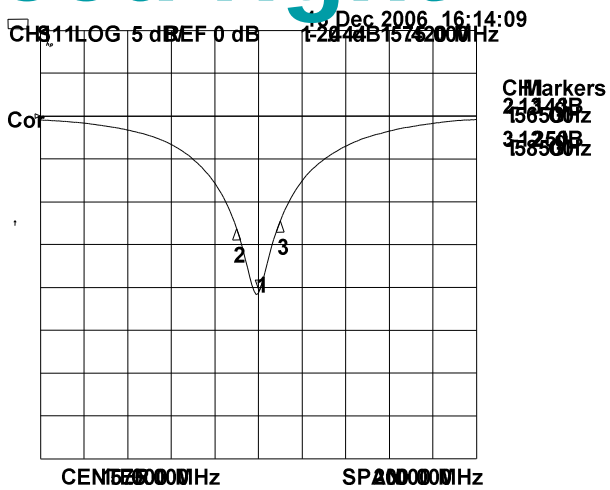

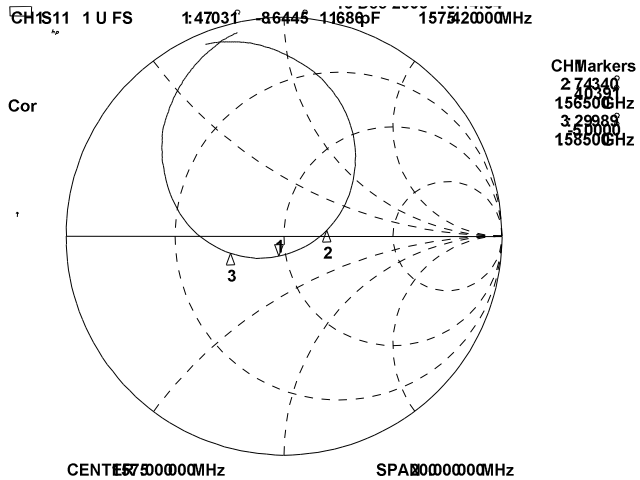

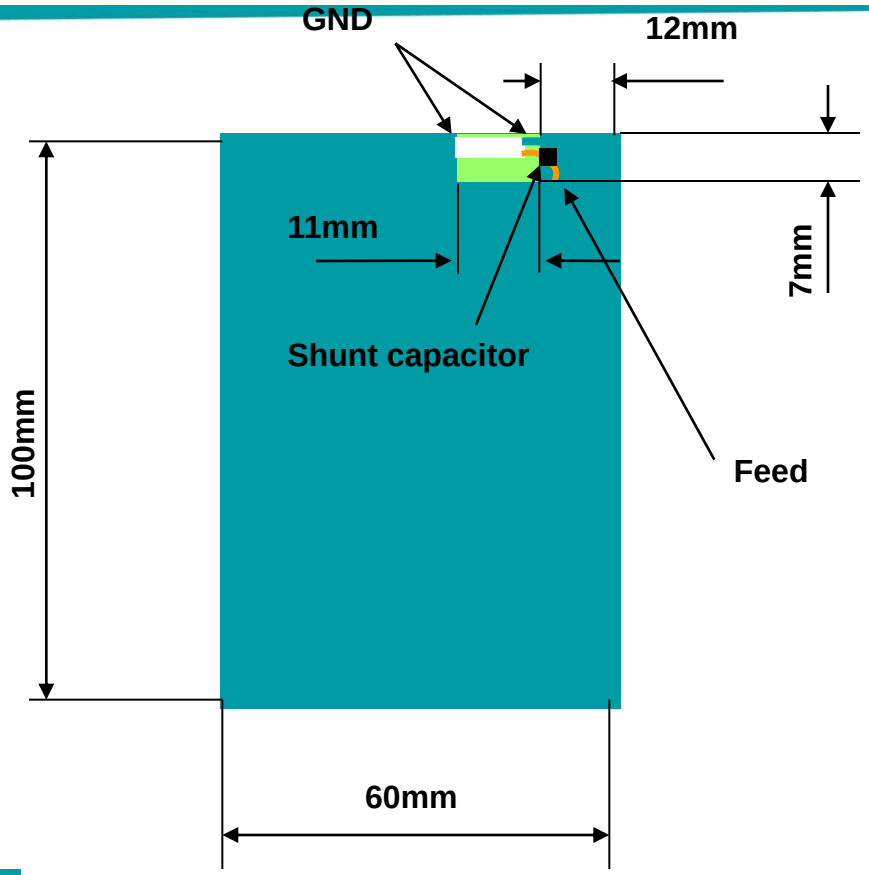

Ground plane (PWB)

Ground clearance area

Ceramic GPS antenna

Feed Line

Company Confidential.

Pulse Electronics

Case 4 Measurement Setup and Matching - feed left

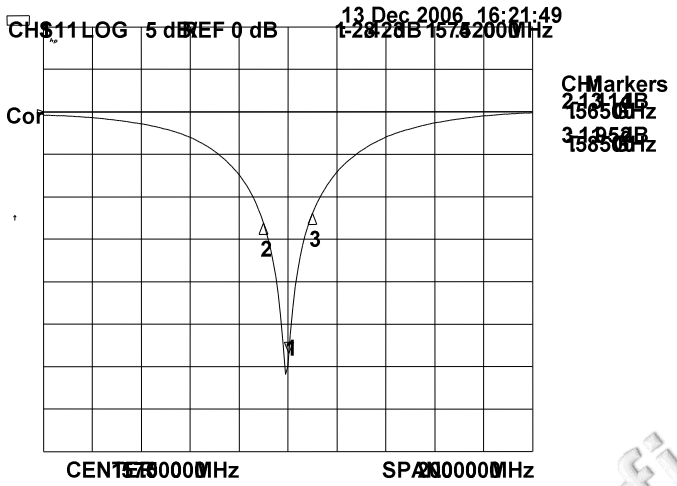

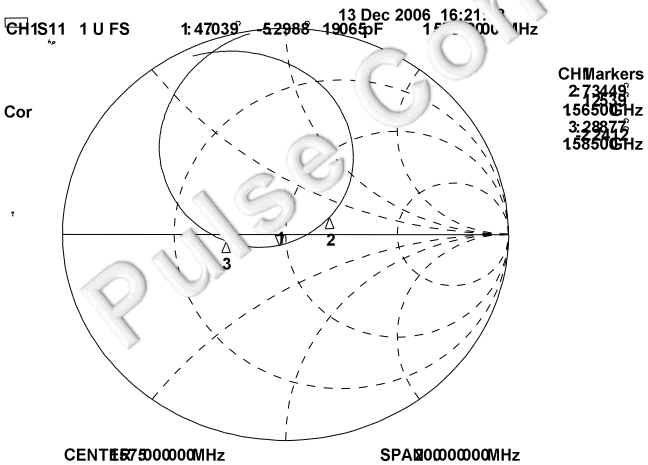

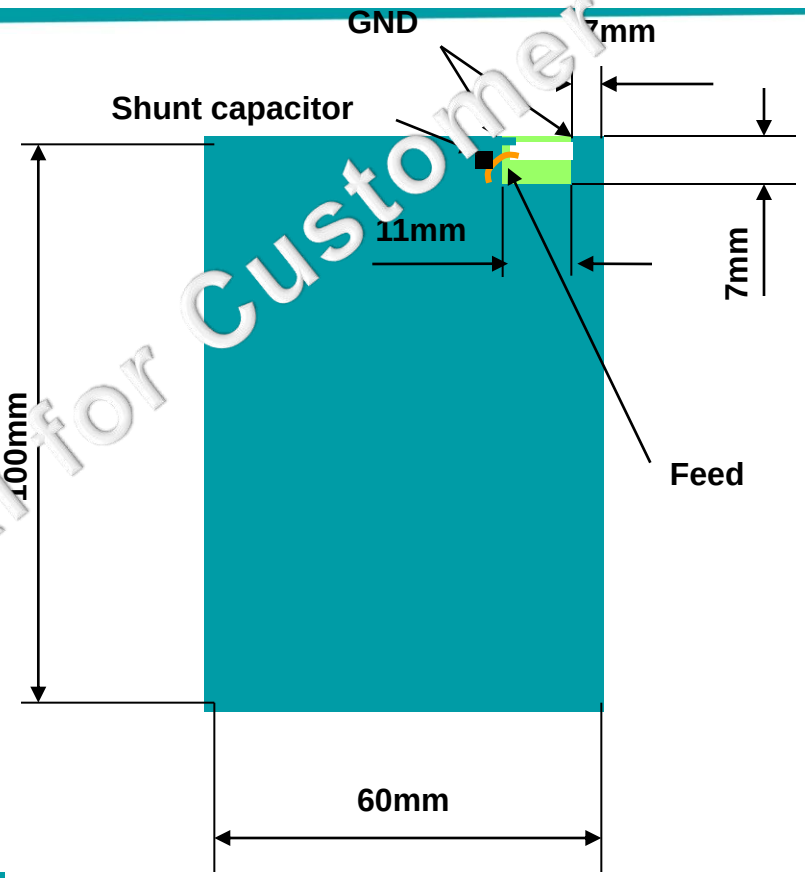

Ground plane (PWB)

Ground clearance area

Ceramic GPS antenna

Feed Line

Pulse Confidential for Customer

Company Confidential.

Pulse Electronics

CASE 5 Measurement Setup and Matching - feed right

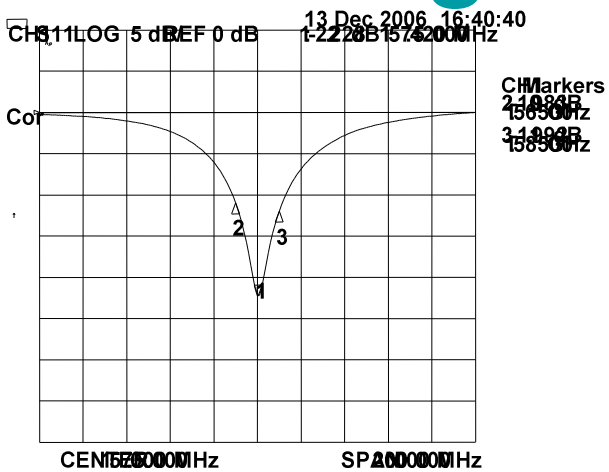

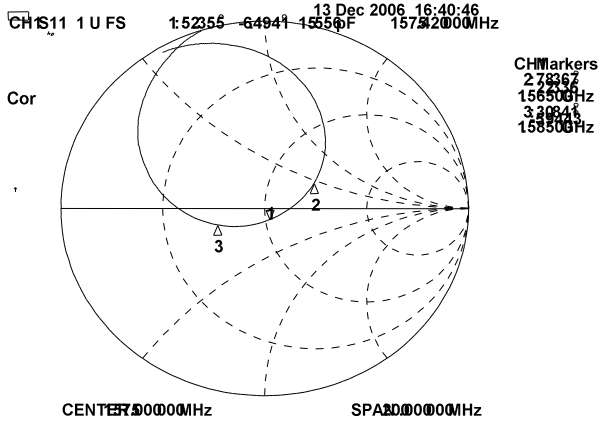

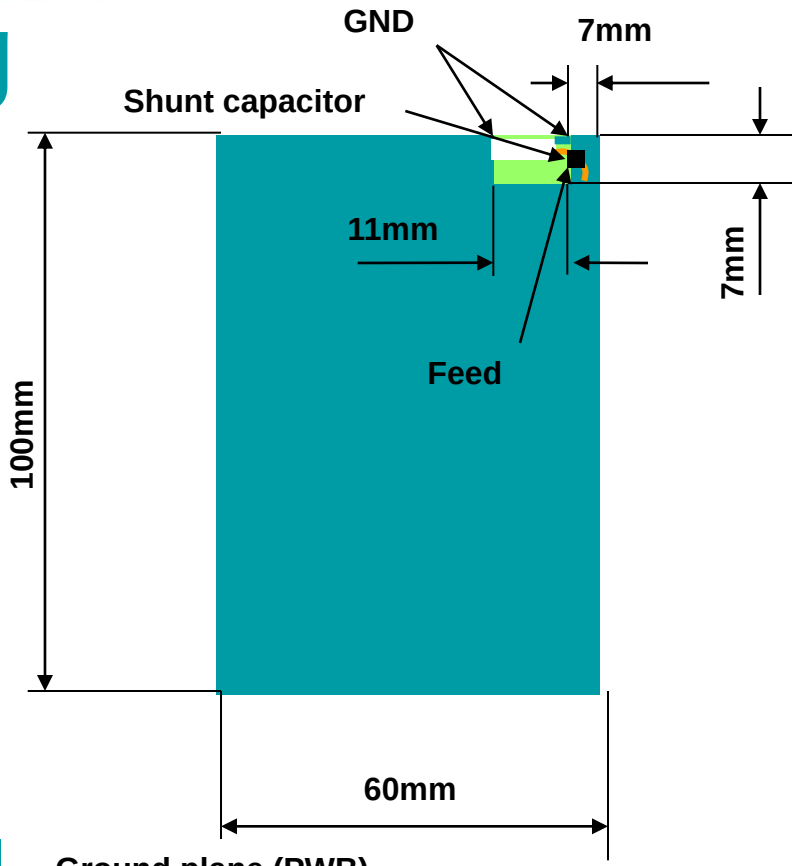

Ground plane (PWB)

Ground clearance area

Ceramic GPS antenna

Feed Line

; Company Confidential.

Pulse Electronics

Efficiency in Different Positions

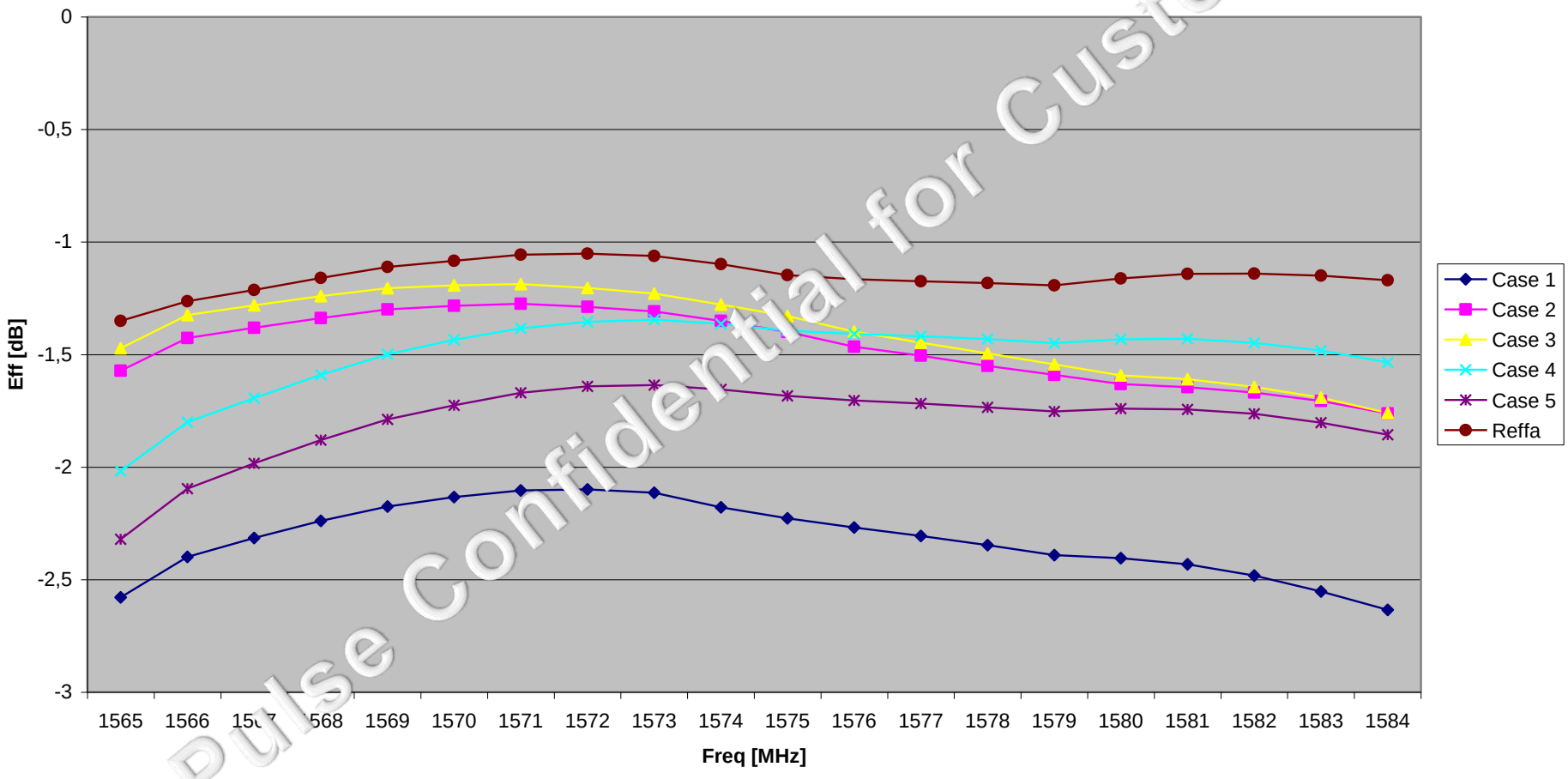

Pulse Confidential for Customer

All material is Company Confidential.

Pulse Electronics

Further Placement Recommendations

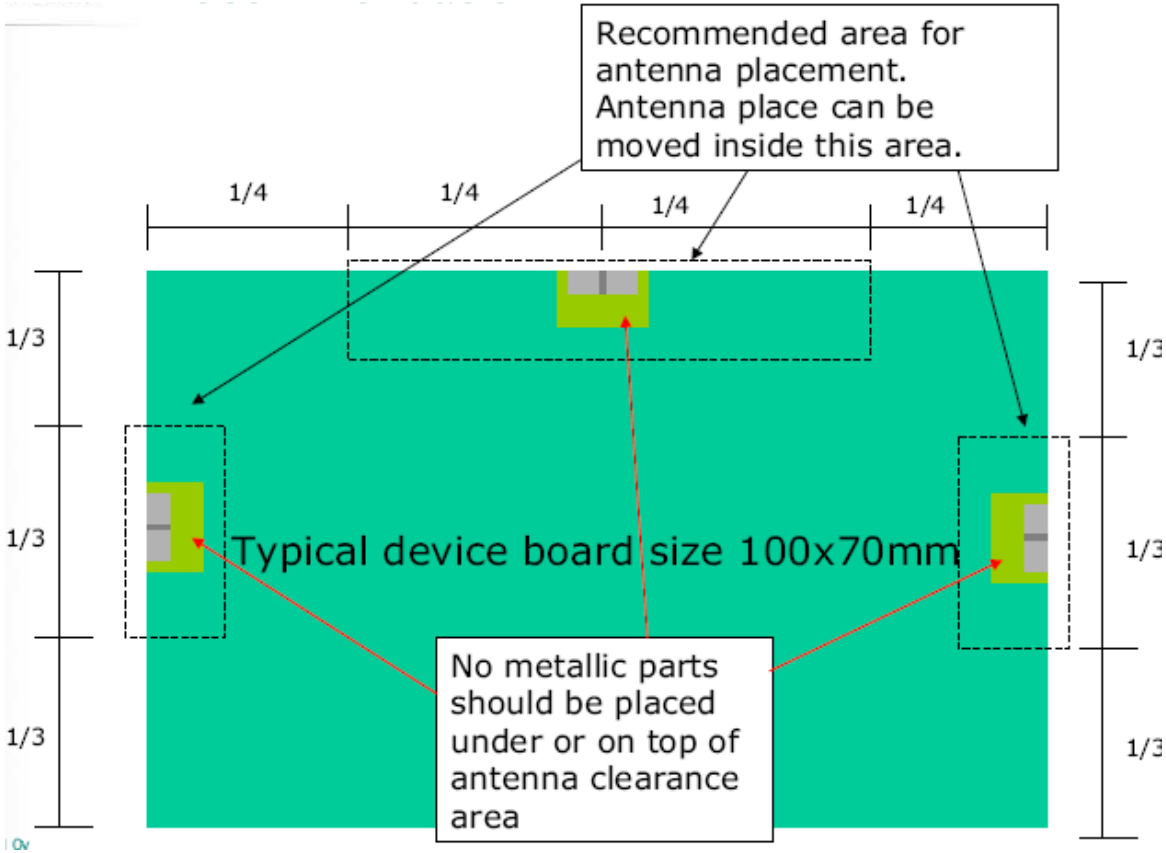

- Fractions represent wavelengths

All material is Company Confidential.

Pulse Electronics

LCD panels

- LCD effect both antenna frequency and efficiency
- Frequency detuning can be compensated by changing clearance area dimensions
- OG ceramics are less sensitive to LCD proximity than GC ceramics
- *Test with LCD panel in mock-up testing as early as possible as well as any other large metallic objects on PCBA!*

All material is Company Confidential.

PCB layout considerations

- GND contacts around GC –area
- Other GND vias on board
- GC area shape
- Grounding other metallic objects
- Feeding orientation, not from corner side
- Make consistent ground around GC area
- Multi-layer board considerations
- Notches on board edges

All material is Company Confidential.

GND contacts

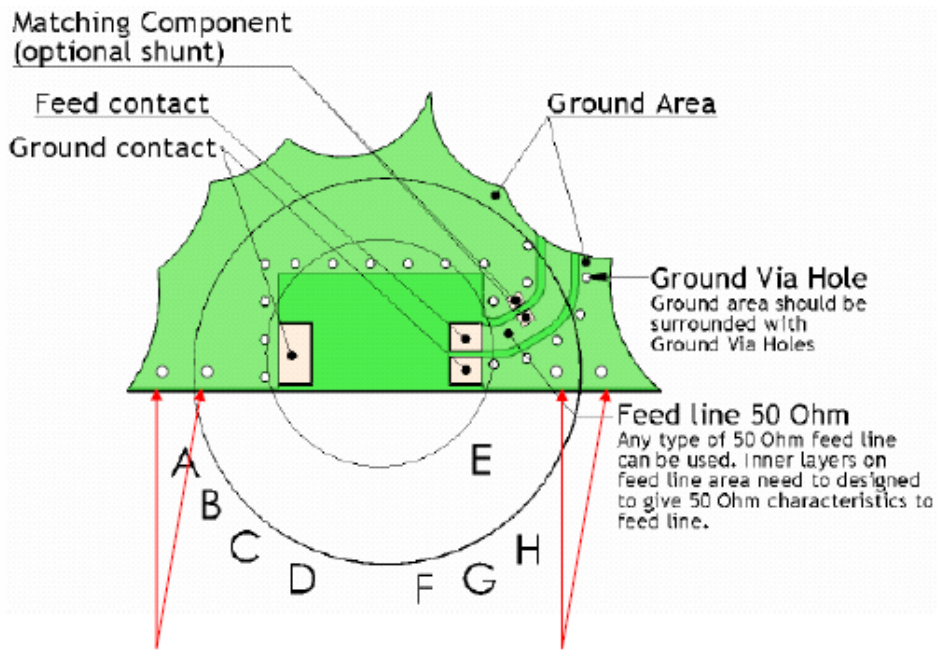

- Place additional GND vias on board edge to ensure good RF grounding through board. These minimize possible “instability” and harmonic resonances from the ground plane

All material is Company Confidential.

Pulse Electronics

Feed orientation

- Do not feed from board corner side if antenna is close to corner
- Always place the feed as inner one of the two adjacent GND and Feed terminals

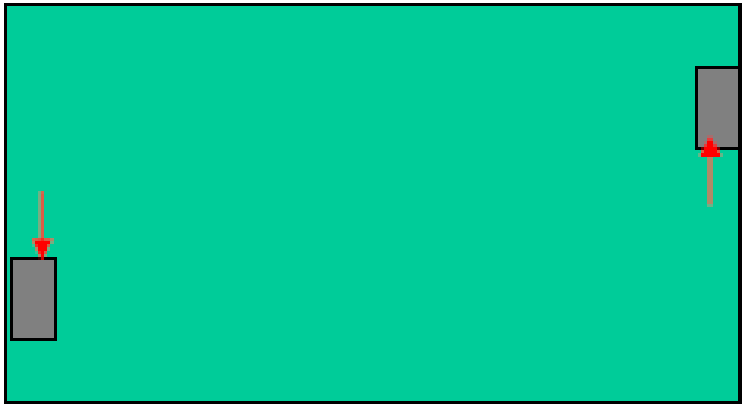

All material is Company Confidential.

Ground Clearance area shape

- GC-area does not need to be square shaped. Square shape is presented in Pulse apps notes as a standard starting point for the layout work.

- Arbitrary form GC-areas can be used as long as total area and current return path distance is optimized to give correct resonant frequency and BW

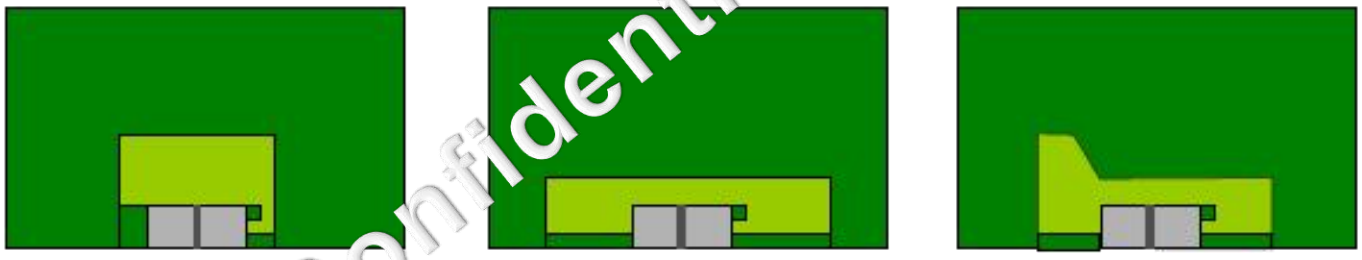

Pulse Confidential for Customer

All material is Company Confidential.

Pulse Electronics

Board edge

- It is ok to have antenna moved couple millimeters inwards to PCB
- Ground copper on antenna corners should be chamfered to minimize effect on performance

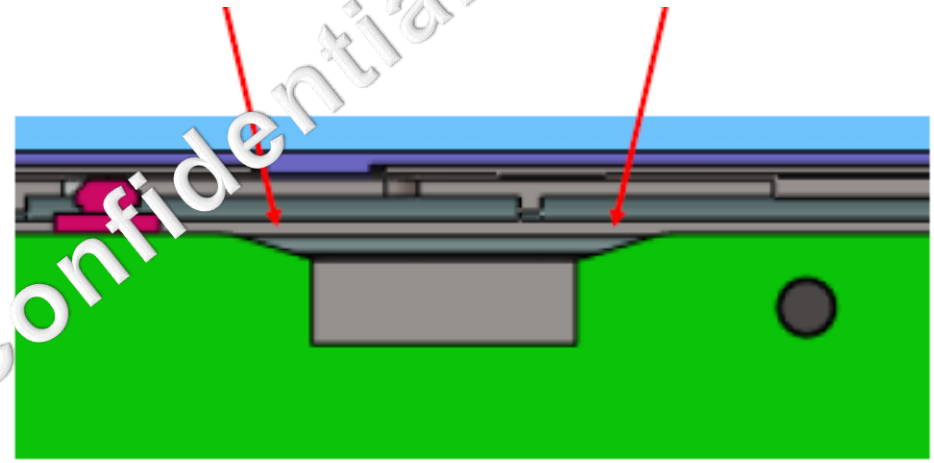

Pulse Confidential for Customer

All material is Company Confidential.

Pulse Electronics

Notches on board edge

- Small cut outs on board edge are ok from antenna point of view
- They do not break the continuity of the ground plane

All material is Company Confidential.

Consistency of ground pour

- Antenna sees the whole PCB as ground plane
- Overall board dimensions determine the PCB electrical length
- Especially around the GC area ground pour needs to be solid
- Ground pour does not need to be continued on same layer over the whole board. Several layers can be connected together with via holes

All material is Company Confidential.

Multi-layer board considerations

- Again most critical point on multi-layer layout is the GC area surroundings
- All layers around the GC area must be connected together to avoid signal coupling/leaking into gaps between the layers
- Poorly grounded GC are also causes problems in impedance matching and frequency control
- DC voltage layers can be left floating as long as metal of that layer does not overlap with the GC area

All material is Company Confidential.

Integrating other components (speakers, microphones etc.)

- Small components can be handled based on metallic object clearances noted in the application notes.
- Include metallic objects close to antenna into your mock up testing as early as possible:
  - Connector
  - Switches
  - Wibra
  - Microphone
  - Shield cans
  - etc.

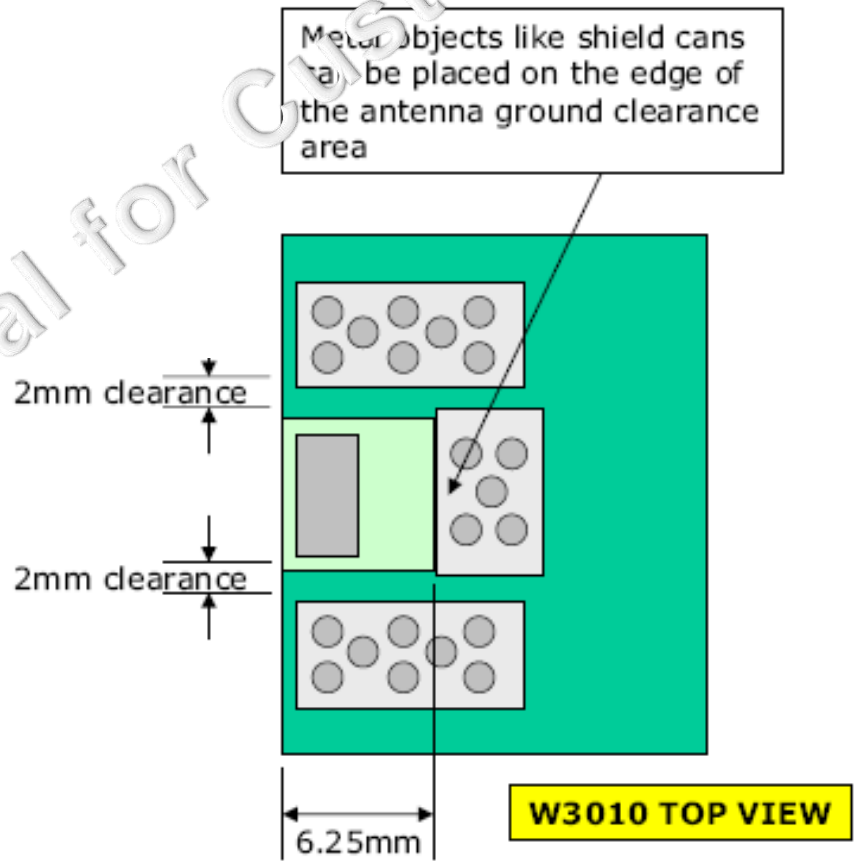

Pulse Confidential for Customer

All material is Company Confidential.

Pulse Electronics

Grounding of other components

- Metallic components like display, shield cans and mechanical supporting structures may cause loss of radiation if not properly grounded
- Antenna signal can couple to these components especially if there is gap between the PCB and the metallic component
- Such gaps can create a high-loss, non-radiating resonances in or out of the band which lowers the antenna efficiency
- Close-to-band resonances are especially harmful. It may even look that antenna matching improves due to these extra resonances, but in worst case, they reduce the radiation significantly

All material is Company Confidential.

Thank You.